SAFETY NOTICES

⚠ WARNING

Study This Handbook Before Starting The Machine

You must understand and follow the instructions in this handbook. You must observe all relevant laws and regulations. If you are unsure about anything, ask your JCB distributor or employer. **Do not guess**, you or others could be killed or seriously injured.

INT-1-1-1

⚠ CAUTION

Do not fit an attachment to this machine which is not JCB approved. Consult your JCB distributor before fitting any non approved attachment.

8-4-1-6

In this handbook and on the machine there are safety notices. Each notice starts with a signal word. The meanings of the signal words are given below.

⚠ DANGER

Denotes an extreme hazard exists. If proper precautions are not taken, it is highly probable that the operator (or others) could be killed or seriously injured.

INT-1-2-1

⚠ WARNING

Denotes a hazard exists. If proper precautions are not taken, the operator (or others) could be killed or seriously injured.

INT-1-2-2

⚠ CAUTION

Denotes a reminder of safety practices. Failure to follow these safety practices could result in injury to the operator (or others) and possible damage to the machine.

INT-1-2-3

MACHINE SECURITY

Vandalism and theft of unattended machines is an ever increasing problem and JCB is doing everything possible to help combat this.

JCB PLANTGUARD is a comprehensive package available to help you safeguard your machine. It includes such devices as vandal proof covers, window etching, immobiliser, concealed serial number, battery isolator, Tracker security system and much more.

Remember that the fitting of any one of these security devices will help to minimise not only the damage or loss of your machine but also subsequent lost productivity. It could also result in reduced insurance premiums.

Your JCB Distributor or Dealer will be pleased to provide information on any of these sensible precautions. ACT NOW!

INT-1-2-4

CONTENTS

Page

Introduction

About this Handbook
Machine model and serial number 1
Using this handbook 1
Units of measurement 1
Page numbering 1
Left side/right side 1
Using the machine..... 1

The JCB Backhoe Loader 2

Safety check list
General safety 3
Operating safety 4
Maintenance safety 5

Safety decals..... 7-8

Identifying your machine
Machine identification plate 9
Typical vehicle number (VIN) 9
Typical engine identification number..... 9
Serial plates..... 10

Operation

Introduction 11

Before entering the cab 11

Entering/leaving the cab..... 12
Control lever locks..... 12

Doors and windows
Opening and closing the doors 13
Opening and closing the rear window..... 13

Seat controls 14

Seat belt
Fasten the seat belt..... 15
Check the seat belt is operating correctly..... 15
Release the seat belt..... 15

Engine and drive controls, switches and instruments
Layout..... 16
Controls 17-18
Multi-purpose steering column switch 19
Front console switches 19
Side console switches..... 20
2/4 wheel drive select switch 21
Starter switch 21
Cab interior light 21
Steer mode selector switch 22
Re-phasing the steer system 22
Instruments 23-24
Visual warnings..... 24
Audible/visual warnings..... 24

Air conditioning and heater controls..... 25

Page

Power Outlet 25

Loader controls 26
Hydraulic speed control 26
Loader shovel 27-29

Stabiliser controls
Lever controls..... 30

Backhoe controls 31
ISO Plus ('+') pattern 32-33
Backhoe foot pedal control (if fitted) 34
Kingpost clamps..... 34

Boom and slew locks
Boom lock 35
Slew lock 36

Before starting the engine 37

Starting the engine..... 38

Inter vehicle start connector 39

Preparing the machine for travel
Backhoe attachments 40
Road travelling position..... 41-42
Site travelling position 43

Testing the parking brake 44

Getting the machine moving 45-46

Stopping and parking the machine 47

Using the attachments and site safety 48-49

Working with the loader
Operating hints..... 50
Filling the loader shovel 50
Loading a truck 51
Getting the machine unstuck 51

Working with the backhoe
Operating hints..... 52
Preparing to use the backhoe 52
Digging 53
Sideshifting the Backhoe 54
Lifting with the backhoe 55

Operating in low and high temperatures 56

Moving a disabled machine
Preparation for towing..... 57

Lifting a machine..... 58

Transporting the machine 59-60

	Page
Detachable roof section	
Removing	61
Replacing	61
Fire extinguisher	
Using the fire extinguisher	62

Maintenance

Lubricants - health and safety	63
Service requirements	
Introduction	64
Maintenance	64
Owner/Operator support	64
Service/Maintenance agreements	64
Lifting regulations - inspections and tests	64
Cleaning the machine	65
Checking for damage	66
Obtaining replacement parts	66
Service Schedules	67-69
Loader arm safety strut	
Installing	70
Removing	70
Engine panels	
Removing and fitting a side panel	71
Removing and fitting the access panel	71
Removing and fitting the engine cover	71
Seat belt	
Checking the seat belt condition and security	72
ROPS/FOPS structure	
Checking the ROPS/FOPS structure	72
Greasing	
Loader arms	73
Backhoe & quick hitch	74
Front & rear axle	75
Driveshafts	76
Multi purpose shovel	76
Kingpost	76
Loader quick hitch	77
Backhoe quick-hitch (hydraulic)	77
Hydraulic pump driveshaft	78
Tyres and wheels	
Tyre inflation	78
Using the Tyre Inflator	79
Checking the wheel nut torques	79
Brakes	
Parking brake adjustment	80
Checking the foot brake fluid level	80

	Page
Engine air filter	
Changing the elements	81
Engine oil and filter	
Checking the oil level	82
Changing the oil and filter	82
Engine cooling system	
Checking the coolant level	83
Changing the coolant	83
Adjusting the fan belt	84
Cleaning the cab heater filter	84
Fuel system	
Types of fuel	85
Fuel standards	85
Low temperature fuels	85
Fatty acid fuels	85
Filling the tank	86
Fuel transfer pump	86
Draining the tank	87
Draining the filter	87
Changing the filter element	87
Draining the sediment bowl	88
Bleed the system	88
Powershift transmission	
Checking the oil level	89
Changing the oil and filter	89
Hydraulic system	
Checking the fluid level	90
Hydraulic tank cap	90
Changing the filter element	91
Draining the tank	92
Changing the suction strainer	92
Front axle	
Checking the differential oil level	93
Changing the differential oil	93
Rear axle	
Checking the differential oil level	94
Changing the differential oil	94
Front and rear axle	
Checking the hub oil levels	95
Changing the hub oil	95
Electrical system	
Fuse identification	96
Relay identification	96
Relay identification - Powershift transmission	97
Link Box Fuses	97
Battery	
Warning symbols	98
First aid - electrolyte	99
Checking the electrolyte level	99
Battery removal	100
Battery isolator	100

CONTENTS

	Page
Hydraulic oil cooler	
Cleaning the tubes/fins	101
Windscreen washer	101
Stabiliser legs	
Wear pads	102
Wear pad adjustment	102
Storage	103
Fire Extinguisher	
Checking the fire extinguisher	104
Service Capacities and Lubricants	105-106

Optional Attachments

Introduction	107
Backhoe attachment operation	
High and low flow attachments	108
Quick release couplings	
Quick release couplings - do's & don'ts	109
Connecting quick release couplings	109
Disconnecting quick release couplings	109
Loader quick-hitch	
Installing the quick-hitch carriage	110
Removing the quick-hitch carriage	110
Installing loader quick-hitch attachments	111-112
Removing loader quick-hitch attachments	113
Backhoe quick-hitch (mechanical type)	
Installing the quick-hitch	114
Removing the quick-hitch	114
Installing backhoe quick-hitch attachments	115
Removing backhoe quick-hitch attachments	116
Sideshift carriage	
Operation safety	117
Operation	117
Installing and removing the carriage	118
Maintenance safety	118
Maintenance	118
Hydraulic Tool Circuit (HTC)	
Connecting the hand held tools	119
Operating the tool	119
Disconnecting the hand held tool	120
Ancillary equipment	
Stowage of ancillary equipment	121-124
Removal of stowed ancillary equipment	124
Laser Levelling Equipment	
Installing the laser leveller	125-126
Using the laser leveller	127
Introduction	128
Safety	129-130
Production information	131
Specifications	132-133
Preparation	134
Use	135
Movement	136
Adjusting the laser equipment	136
Levelling	137
Use of tracer	137
Stopping and disassembly	138
Cleaning	139
Transporting	139
Problems/Causes/Solutions	139
Maintenance	141-143
Hydraulic diagram	144
Electrical diagram	145
Dual Slope Transmitter	
Description	146
Applications	146
Features	146-147
Grade axis orientation	148
Replacement parts	149
Elevating Base	
Description	150
Applications	150
Features/Functions	150
Specifications	150
Replacement parts	151
Tripod Legs	
Description	152
Applications	152
Features/Function	152
Specification	152
Replacement parts	153
Omni-Directional Receiver	
Applications	155
Description	155
Features	155
Specifications	155
Earth Drill	155
Installing	156
Removing	156
Fitting the auger	157
Removing the auger	157
Operating hints	158
Drilling	158
Transporting	158
Maintenance	159-161
Technical specification	162
360 Hammermaster	
Introduction	163
Component Identification	164
Safety	165-168
Travelling	169
Hydraulic oils, filtering and cooling	170
Principle of operation	171-172
Maintenance	173-176
Stowage & Specification	177-178

Page

Sweeper collector
Identification 179
Safety 180-181
Installing/Removing 182
Connecting/disconnecting hydraulics 183
Preparing for use 184
Operation 185-186
Fault finding 187-188
Travelling with sweeper collector 189
Routine maintenance 190-192
Storage 193
Specification 194

Multi purpose shovel 195

Specifications

Lifting (craning) regulations and safe working loads
Lifting regulations 196
Safe working loads 196

Safe working loads - Forks
Loader 196

Safe working loads - Craning (No Bucket Fitted)
Backhoe 197

Backhoe bucket weights and dimensions
- general purpose bucket (standard profile) 198
- general purpose bucket (deep profile) 198
- grading bucket 198
- jaw bucket 198
- tapered ditching bucket 198

Static dimensions 199

Backhoe/Loader dimensions 200

Fording depths 201

Tyre sizes and pressures 201

Hydraulic hose burst pressures 202

Noise and Vibration Data 203

Winterisation and Waterproofing

Introduction 204

Winterisation
Operation 204-205
Snow blind deployment and stowage
- Radiator blind 206
- Cab window blinds 206
- Door blinds 207
- Fuse identification 208
-Relay identification 209

Waterproofing

ABOUT THIS HANDBOOK

Machine Model

This handbook provides information for the 4CX military Backhoe Loader machine.

Using this Handbook

The illustrations in this handbook are for guidance only. Where the machines differ, the text and/or the illustration will specify.

This handbook is arranged to give you a good understanding of the machine and its safe operation. It also contains maintenance information and specification data. Read this handbook from front to back before using the machine for the first time. Particular attention must be given to all the safety aspects of operating and maintaining the machine.

General warnings in this chapter are repeated throughout the book, as well as specific warnings. Read all the safety statements regularly, so you do not forget them. Remember that the best operators are the safest operators.

Finally, treat this handbook as part of the machine. Keep it clean and in good condition. Do not operate the machine without a handbook in the cab. If there is anything you are not sure about, ask your JCB distributor or employer. Do not guess, you or others could be killed or seriously injured.

The manufacturer's policy is one of continuous improvement. The right to change the specification of the machine without notice is reserved. No responsibility will be accepted for discrepancies which may occur between specifications of the machine and the descriptions contained in this publication.
INT-1-2-5/1

Units of measurement

In this handbook, the S.I. system of units is used. For example, liquid capacities are given in litres. The Imperial units follow in parenthesis () eg 28 litres (6 gal).

Using the machine

To use the JCB Backhoe Loader efficiently and safely you must know the machine and have the skill to use it. This handbook instructs you on the machine, its controls and its safe operation. It is not a training manual on the art of excavating or loading. If you are a new operator, get yourself trained in the skills of using a JCB Backhoe Loader before trying to work with it. If you don't, you will not do your job well, and you will be a danger to yourself and others.

Left Side, Right Side

In this handbook, 'left' **A** and 'right' **B** mean your left and right when you are seated correctly in the machine. This is so whether you are facing the loader (front) or the backhoe (rear).

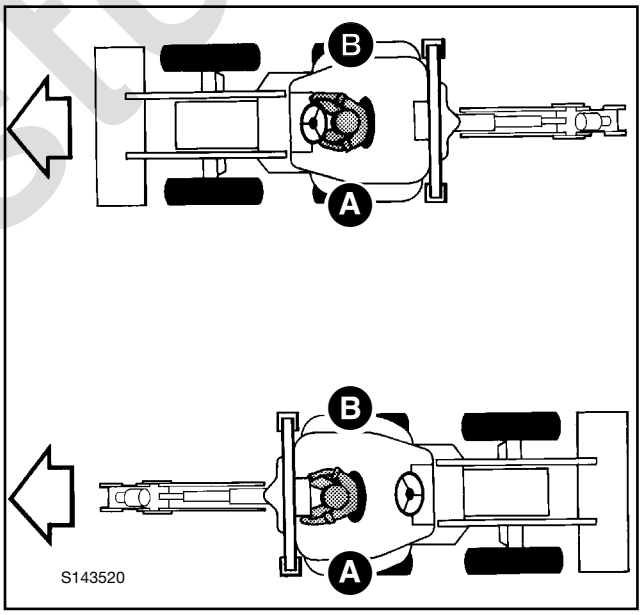

THE JCB BACKHOE LOADER

Machine Description

The backhoe loader is a self propelled wheeled machine with a main structural support designed to carry both a front mounted bucket loading mechanism and a rear mounted backhoe. When used in the backhoe mode, the machine normally digs below ground level with bucket motion towards the machine; the backhoe lifts, swings and discharges material while the machine is stationary. When used in the loader mode, the machine loads or excavates through forward motion of the machine, and lifts, transports and discharges material.

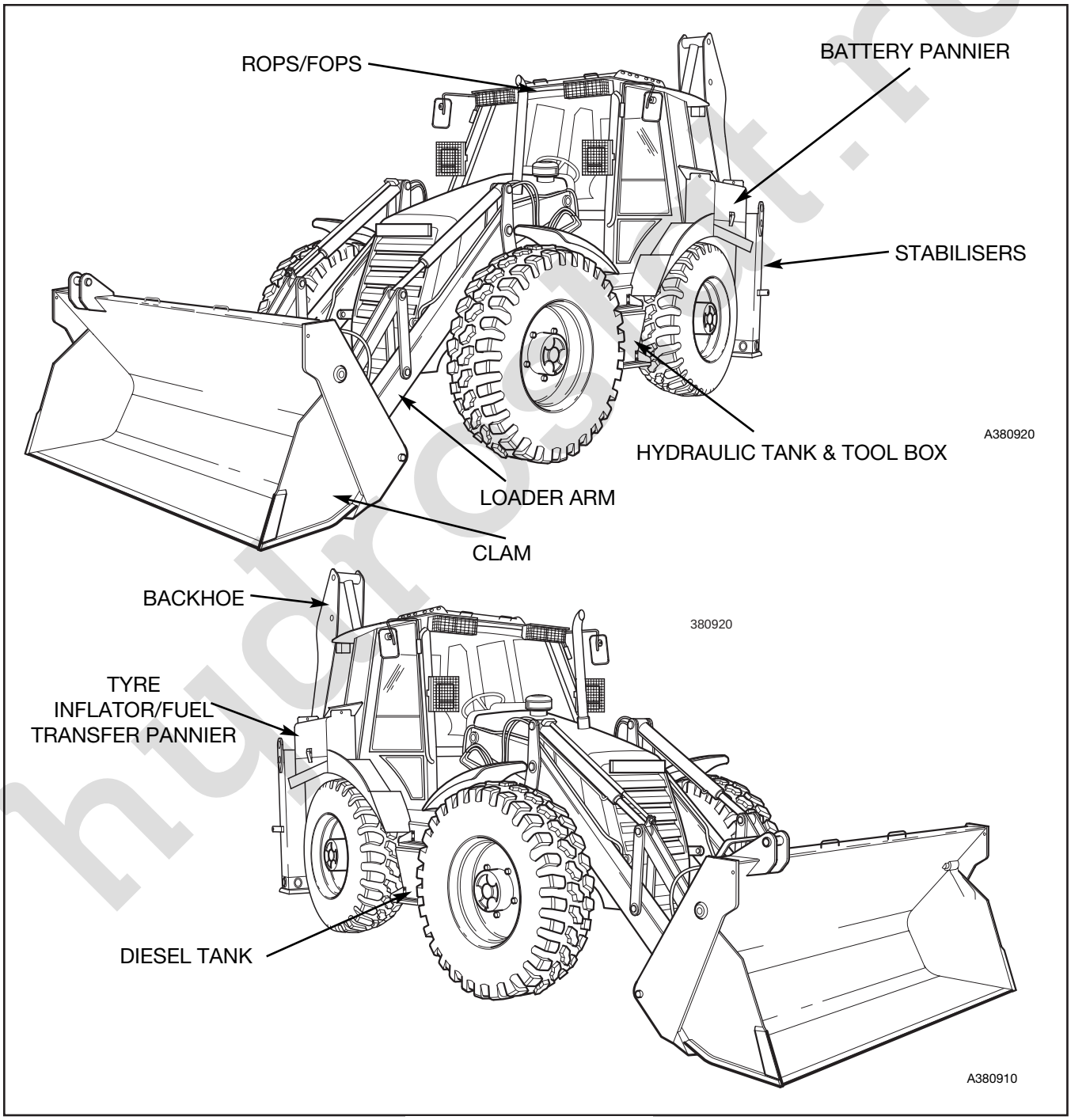

8642-1

SAFETY - YOURS AND OTHERS

All construction and agricultural equipment can be hazardous. When a backhoe loader is correctly operated and properly maintained, it is a safe machine to work with. But when it is carelessly operated or poorly maintained it can become a danger to you (the operator) and others.

In this handbook and on the machine you will find warning messages. Read and understand them. They tell you of potential hazards and how to avoid them. If you do not fully understand the warning messages, ask your employer or JCB distributor to explain them.

But safety is not just a matter of responding to the warnings. All the time you are working on or with the machine you must be thinking what hazards there might be and how to avoid them.

Do not work with the machine until you are sure that you can control it.

Do not start any job until you are sure that you and those around you will be safe.

If you are unsure of anything, about the machine or the job, ask someone who knows. Do not assume anything.

Remember
BE CAREFUL
BE ALERT
BE SAFE

INT-1-3-1/1

SAFETY CHECK LIST

General Safety

WARNING

Handbook

You and others can be injured if you operate or maintain the machine without first studying this handbook. Read the safety instructions before operating the machine. If you do not understand anything, ask your employer or JCB distributor to explain it. Keep this handbook clean and in good condition. Do not operate the machine without a handbook in the cab, or if there is anything on the machine you do not understand.

INT-1-3-2

WARNING

Clothing

You can be injured if you do not wear the proper clothing. Loose clothing can get caught in the machinery. Wear protective clothing to suit the job. Examples of protective clothing are: a hard hat, safety shoes, safety glasses, a well fitting overall, ear-protectors and industrial gloves. Keep cuffs fastened. Do not wear a necktie or scarf. Keep long hair restrained.

INT-1-3-6

WARNING

Machine Modifications

This machine is manufactured in compliance with legislative and other requirements. It should not be altered in any way which would affect or invalidate any of these requirements. For advice consult your JCB Distributor.

Reference should also be made to Optional Attachments section where appropriate.

INT-1-3-10

WARNING

Alcohol and Drugs

It is extremely dangerous to operate machinery when under the influence of alcohol or drugs. Do not consume alcoholic drinks or take drugs before or whilst operating the machine or attachments. Be aware of medicines which can cause drowsiness.

INT-1-3-9

CAUTION

Passengers

Passengers in or on the machine can cause accidents. The JCB Backhoe Loader is a one-man machine. Do not carry passengers.

INT-2-2-2

WARNING

Raised Attachments

Raised attachments can fall and injure you. Do not walk or work under raised attachments unless they are safely blocked.

INT-1-3-8

CAUTION

Regulations

Obey all laws, work site and local regulations which affect you and your machine.

INT-1-3-3

WARNING

Care and Alertness

All the time you are working with or on the machine, take care and stay alert. Always be careful. Always be alert for hazards.

INT-1-3-5

SAFETY CHECK LIST
(continued)

Operating Safety

⚠ WARNING

Machine Condition

A defective machine can injure you or others. Do not operate a machine which is defective or has missing parts. Make sure the maintenance procedures in this handbook are completed before using the machine.

INT-2-1-2

⚠ WARNING

Lifting Equipment

You can be injured if you use faulty lifting equipment. Make sure that lifting equipment is in good condition. Make sure that lifting tackle complies with all local regulations and is suitable for the job. Make sure that lifting equipment is strong enough for the job.

INT-1-3-7

⚠ WARNING

Engine

The engine has exposed rotating parts. Do not open the engine cover while the engine is running. Do not use the machine with the cover open.

INT-2-1-6/1

⚠ WARNING

Machine Limits

Operating the machine beyond its design limits can damage the machine, it can also be dangerous. Do not operate the machine outside its limits. Do not try to upgrade the machine performance with unapproved modifications.

INT-2-1-4

⚠ WARNING

Controls

You and others can be killed or injured if you operate the control levers from outside the cab. Operate the control levers only when you are seated correctly in the cab.

INT-2-1-3

⚠ DANGER

Sparks

Explosions and fire can be caused by sparks from the exhaust or the electrical system. Do not use the machine in closed areas where there is flammable material, vapour or dust.

INT-2-2-10

⚠ WARNING

Visibility

Accidents can be caused by working in poor visibility. Keep windows clean and use your lights to improve visibility. Do not operate the machine if you cannot see properly.

INT-2-1-11

⚠ WARNING

Ramps and Trailers

Water, mud, ice, grease and oil on ramps or trailers can cause serious accidents. Make sure ramps and trailers are clean before driving onto them. Use extreme caution when driving onto ramps and trailers.

INT-2-2-6

⚠ WARNING

Safety Barriers

Unguarded machines in public places can be dangerous. In public places, or where your visibility is reduced, place barriers around the work area to keep people away.

INT-2-2-8

⚠ WARNING

Parking

An incorrectly parked machine can move without an operator. Follow the instructions in this handbook to park the machine correctly.

INT-2-2-4

⚠ WARNING

Hazardous Atmospheres

This machine is designed for use in normal out door atmospheric conditions. It should not be used in an enclosed area without adequate ventilation. Do not use the machine in a potentially explosive atmosphere, i.e. combustible vapours, gas or dust, without first consulting your JCB Distributor.

INT-2-1-14

⚠ WARNING

Should the machine start to roll over, you can be crushed if you try to leave the cab. If the machine starts to roll over, DO NOT TRY TO JUMP FROM THE CAB. STAY IN THE CAB, WITH YOUR SEAT BELT FASTENED.

INT-2-1-12

SAFETY CHECK LIST
(continued)

Maintenance Safety

WARNING

Modifications and Welding

Non-approved modifications can cause injury and damage. Parts of the machine are made from cast iron; welds on cast iron can weaken the structure and break. Do not weld cast iron. Contact your JCB dealer before modifying the machine.

INT-3-1-2/1

WARNING

Metal Splinters

You can be injured by flying metal splinters when driving metal pins in or out. Use a soft faced hammer or drift to remove and fit metal pins. Always wear safety glasses.

INT-3-1-3

WARNING

Safety Strut

Raised loader arms can drop suddenly and cause serious injury. Before working under raised loader arms, fit the loader arm safety strut.

2-1-1-6

WARNING

Communications

Bad communications can cause accidents. If two or more people are working on the machine, make sure each is aware of what the others are doing. Before starting the engine make sure the others are clear of the danger areas; examples of danger areas are: the rotating blades and belt on the engine, the attachments and linkages, and anywhere beneath or behind the machine. People can be killed or injured if these precautions are not taken.

INT-3-1-5

WARNING

Counterweights

Your machine may be fitted with counterweights. They are extremely heavy. Do not attempt to remove them.

INT-3-2-5

WARNING

Fires

If your machine is equipped with a fire extinguisher, make sure it is checked regularly. Keep it in the operator's cab until you need to use it.

Do not use water to put out a machine fire, you could spread an oil fire or get a shock from an electrical fire. Use carbon dioxide, dry chemical or foam extinguishers. Contact your nearest fire department as quickly as possible. Firefighters should use self-contained breathing apparatus.

INT-3-2-7/1

WARNING

Battery Terminals

The machine is negatively earthed. Always connect the negative pole of the battery to earth.

When connecting the battery, connect the earth (-) lead last.

When disconnecting the battery, disconnect the earth (-) lead first.

INT-3-1-9

WARNING

Repairs

Do not try to do repairs or any other type of maintenance work you do not understand. Get a Service Manual from your JCB distributor, or get the work done by a specialist engineer.

INT-3-1-1

WARNING

Hydraulic Pressure

Hydraulic fluid at system pressure can injure you. Before disconnecting or connecting hydraulic hoses, stop the engine and operate the controls to release pressure trapped in the hoses. Make sure the engine cannot be started while the hoses are open.

INT-3-1-11/1

WARNING

Hydraulic hoses

Damaged hoses can cause fatal accidents. Inspect the hoses regularly for:
Damaged end fittings
Chafed outer covers
Ballooned outer covers
Kinked or crushed hoses
Embedded armouring in outer covers
Displaces end fittings.

INT- 3-3-2

WARNING

Accumulators

The accumulators contain hydraulic oil and gas at high pressure. Prior to any work being carried out on the braking system they must be discharged by a JCB distributor as the sudden release of the hydraulic oil or gas may cause injury.

7-1-1-4

WARNING

Soft Ground

A machine can sink into soft ground. Never work under a machine on soft ground.

INT-3-2-4

SAFETY CHECK LIST
(continued)

Maintenance Safety (continued)

WARNING

Fluoroelastomeric Materials

Certain seals and gaskets (e.g. crankshaft oil seal) on JCB machines contain fluoroelastomeric materials such as Viton, Fluorel and Technoflon. Fluoroelastomeric materials subjected to high temperatures can produce highly corrosive hydrofluoric acid. THIS ACID CAN SEVERELY BURN.

New fluoroelastomeric components at ambient temperature require no special safety precautions.

Used fluoroelastomeric components whose temperatures have not exceeded 300°C require no special safety precautions. If evidence of decomposition (e.g. charring) is found, refer to the next paragraph for safety instructions DO NOT TOUCH COMPONENT OR SURROUNDING AREA.

Used fluoroelastomeric components subjected to temperatures greater than 300°C (e.g. engine fire) must be treated using the following safety procedure. Make sure that heavy duty gloves and special safety glasses are worn:

1 Ensure that components have cooled then remove and place material into plastic bags.

2 Thoroughly wash contaminated area with 10% calcium hydroxide or other suitable alkali solution, if necessary use wire wool to remove burnt remains.

3 Thoroughly wash contaminated area with detergent and water.

4 Contain all removed material, gloves etc. used in this operation in sealed plastic bags and dispose of in accordance with Local Authority Regulations.

DO NOT BURN FLUOROELASTOMERIC MATERIALS.

If contamination of skin or eyes occurs, wash the affected area with a continuous supply of clean water or with calcium hydroxide solution for 15-60 minutes. Get medical attention immediately.
INT-3-3-5/1

WARNING

Jacking

A machine can roll off jacks and crush you unless the wheels have been chocked. Always chock the wheels at the opposite end of the machine that is to be jacked. Do not work underneath a machine supported only by jacks. Always support a jacked-up machine on axle stands before working underneath it.
INT-3-2-8

WARNING

Under no circumstances must the engine be run with the transmission in gear and only one driving wheel jacked clear of the ground, since the wheel on the ground will move the machine.
INT-3-1-16

CAUTION

Rams

The efficiency of the rams will be affected if they are not kept free of solidified dirt. Clean dirt from around the rams regularly. When leaving or parking the machine, close all rams if possible to reduce the risk of weather corrosion.
INT-3-2-10

CAUTION

Arc Welding

Before carrying out arc welding on the machine, disconnect the battery and alternator to protect the circuits and components.

The battery must still be disconnected even if a battery isolator is fitted.

Make sure that the welding earth return path is kept as short as possible. This prevents high currents being induced in the machine chassis or wiring harnesses.

If the machine is equipped with amplifier drivers or electronic control units (E.C.U.s), then disconnect them before welding. Failure to disconnect the amplifier drivers or E.C.U.s could result in irreparable damage to the electronic components.
INT-3-1-15/1

WARNING

Oil

Oil is toxic. If you swallow any oil, do not induce vomiting, seek medical advice. Used engine oil contains harmful contaminants which can cause skin cancer. Do not handle used engine oil more than necessary. Always use barrier cream or wear gloves to prevent skin contact. Wash skin contaminated with oil thoroughly in warm soapy water. Do not use petrol, diesel fuel or paraffin to clean your skin.
INT-3-2-3

DECALS

Keep all decals clean and readable. Replace lost or damaged decals. The decals and their attachment points are shown on the following pages. Each decal has a part number printed on it, use this number to order a new decal from your JCB distributor.

INT-3-3-6

⚠ WARNING

Decals

You can be injured if you do not obey the decal safety instructions. Keep decals clean. Replace unreadable or missing decals with new ones before operating the machine. Make sure replacement parts include warning decals where necessary.

INT-1-3-4

⚠ WARNING

If you need eye-glasses for reading, make sure you wear them when reading the safety decals. Decals are strategically placed around the machine to remind you of possible hazards. Do not over-stretch or place yourself in dangerous positions to read the decals.

INT-3-3-4

Note: See OPTIONAL ATTACHMENTS Section for information regarding the decals fitted on attachments.

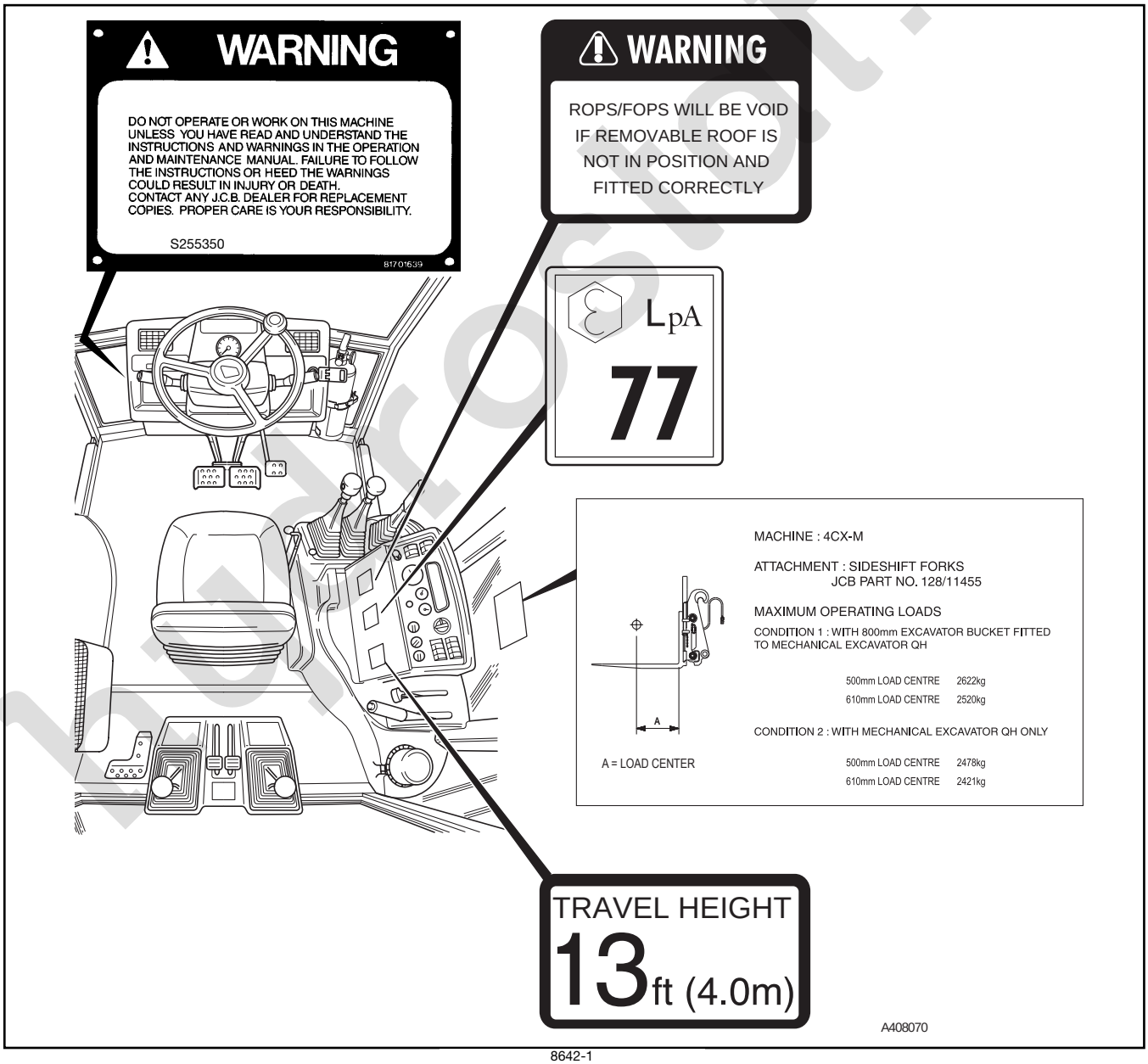

8642-1

DECALS
(continued)

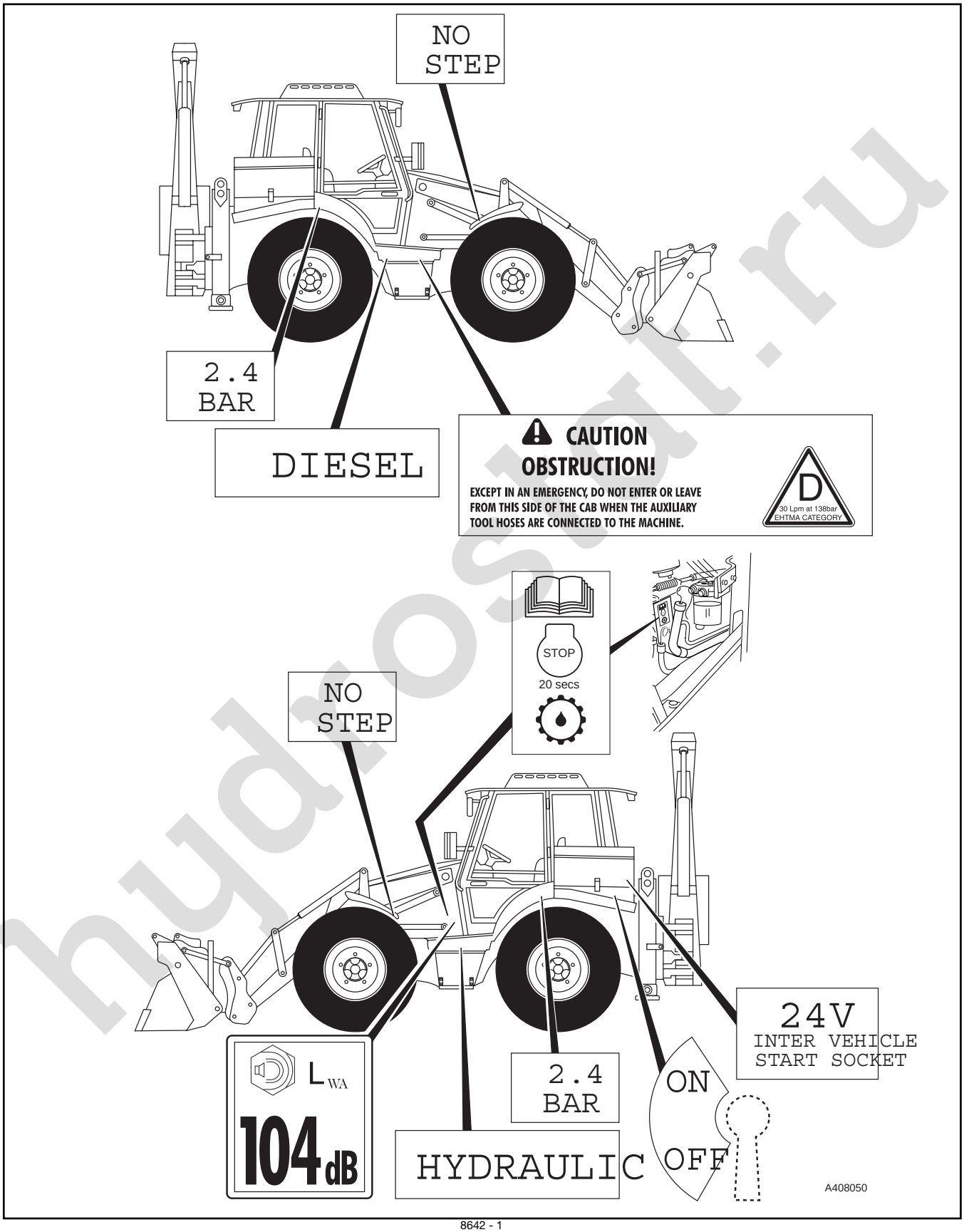

IDENTIFYING YOUR MACHINE

Machine Identification Plate

Your machine has an identification plate mounted on the loader tower. The serial numbers of the machine and its major units are stamped on the plate.

The serial number of each major unit is also stamped on the unit itself. If a major unit is replaced by a new one, the serial number on the identification plate will be wrong. Either stamp the new number of the unit on the identification plate, or simply stamp out the old number. This will prevent the wrong unit number being quoted when replacement parts are ordered.

The machine and engine serial numbers can help identify exactly the type of equipment you have.

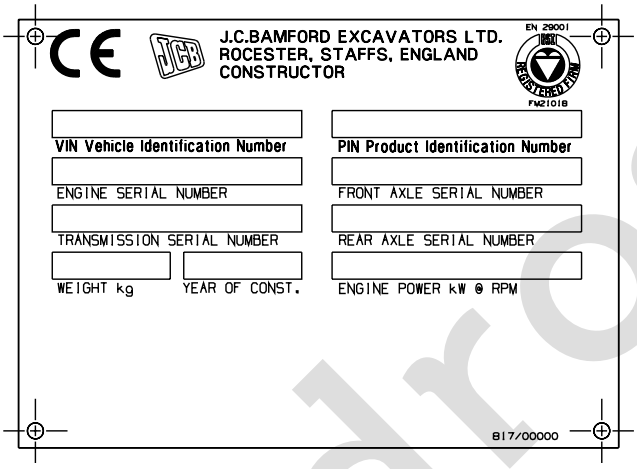

A276550

Typical Vehicle Identification Number (VIN)

SLP	4CX	T	S	R	E	0930001
A	B	C	D	E	F	G

A World Manufacturer Identification

B Machine Model

C Steer Type (T= 2WS, F=4WS)

D Build Type (S=Sideshift, C=Centremount, L=Loader)

E Year of Manufacture:
1 = 2001
2 = 2002
3 = 2003
4 = 2004
5 = 2005
6 = 2006
7 = 2007

F Manufacturer Location (E = England)

G Machine Serial Number:

Typical Engine Identification Number

AB	50262	U	500405	P
A	B	C	D	E

A Engine Type
AB = 4 cylinder turbo

B Build Number

C Country of Origin

D Engine Sequence Number

E Year of Manufacture

IDENTIFYING YOUR MACHINE

Serial Plates

- **A** Front Axle (4WS machine)
- **B** Rear Axle (4WS machine)
- **C** Powershift Transmission
- **D** Engine

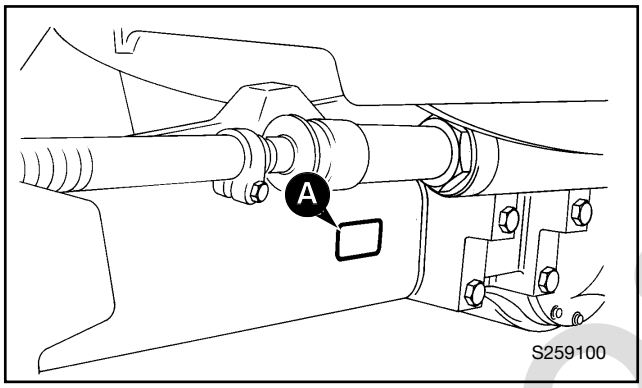

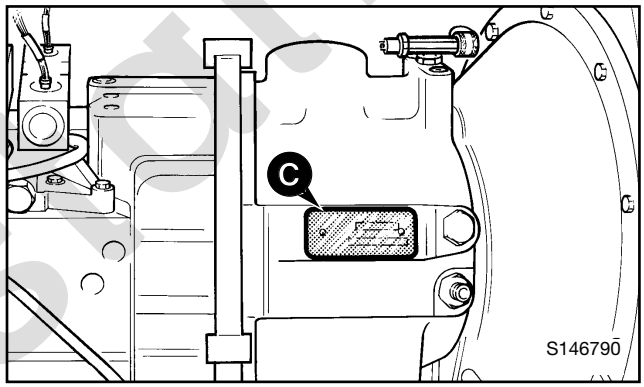

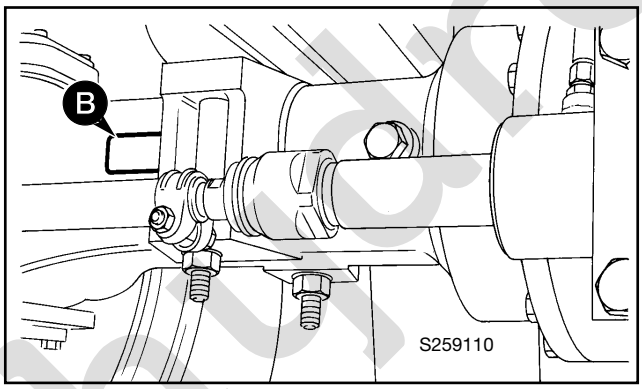

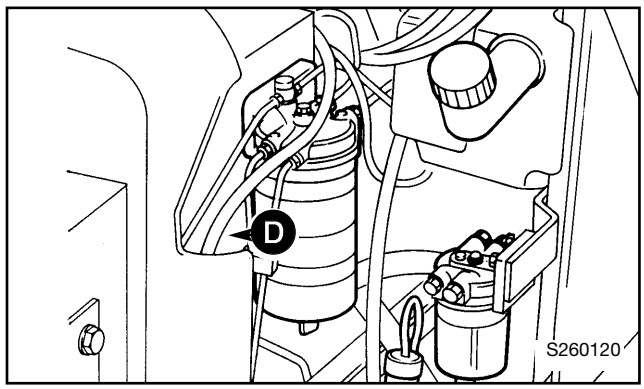

INTRODUCTION

The aim of this part of the handbook is to guide the operator step-by-step through the task of learning how to operate the machine efficiently and safely. Read the OPERATION section through from beginning to end.

Before starting the machine, sit in the drivers seat and familiarise yourself with the layout of the cab. Use your handbook to identify each control lever, switch, gauge, button and pedal. **Do not guess**. If there is anything you do not understand, ask your JCB distributor.

The operator must always be aware of events happening outside the cab as well as inside the cab. **Safety** must always be the most important feature when operating the JCB Backhoe Loader.

When you have familiarised yourself with the operating controls, gauges and switches, practice using them. Drive the machine in an open space, clear of people. Get to know the 'feel' of the machine and its driving controls.

Finally, do not rush the job of learning, make sure you fully understand everything in the OPERATION section. Take your time and work efficiently and safely.

Remember

BE CAREFUL
BE ALERT
BE SAFE

BEFORE ENTERING THE CAB

The following checks should be made each time you return to the machine after leaving it for any period of time. We advise you also to stop the machine occasionally during long work sessions and do the checks again.

All these checks concern the serviceability of the machine. Some concern your safety. Get your service engineer to check and correct any defects.

⚠ WARNING

Walking or working under raised attachments can be hazardous. You could be crushed by the attachments or get caught in the linkages.

Lower the attachments to the ground before doing these checks. If you are new to this machine, get an experienced operator to lower them for you.

If there is nobody to help you, study this handbook until you have learned how to lower the attachments. Also make sure that the parking brake is engaged before doing these checks.
2-2-1-1

1 Check for Cleanliness

- **a** Clean the windows, light lenses and rear view mirrors.
- **b** Remove dirt and debris, especially from around the linkages, rams, pivot points and radiator.
- **c** Make sure the cab step and handholds are clean and dry.
- **d** Clean all safety decals. Replace any that are missing or cannot be read.

2 Check for Damage

- **a** Inspect the machine generally for damaged and missing parts.
- **b** Make sure that the bucket is secure and in good condition
- **c** Make sure that all pivot pins are secured correctly in place.
- **d** Inspect the windows for cracks and damage. Glass splinters can blind.
- **e** Check for oil, fuel and coolant leakages underneath the machine.

⚠ WARNING

You could be killed or injured if a machine tyre bursts. Do not use the machine with damaged, incorrectly inflated or excessively worn tyres.
2-2-1-2

3 Check the Tyres

- **a** Make sure the tyres are correctly inflated.
- **b** Check for cut rubber and penetration by sharp objects. Do not use a machine with damaged tyres.

4 Check the Engine Panels, Bonnet and Fuel Cap

- **a** Make sure the engine panels and bonnet catches are secure.
- **b** Make sure the fuel filler cap is tightly closed and locked.

ENTERING AND LEAVING THE CAB

Entering & Leaving the Cab

⚠ WARNING

Entering or leaving the cab or canopy must only be made where steps and handrails are provided. Always face the machine when entering and leaving. Make sure the step(s), handrails and your boot soles are clean and dry. Do not jump from the machine. Do not use the machine controls as handholds, use the handrails.

INT-2-1-7/1

Make sure the machine is stopped and correctly parked before entering or leaving the cab. When you get on and off the machine always maintain a three point contact with the handrails and step as shown at **A**. Do not use the machine controls or steering wheel as handholds.

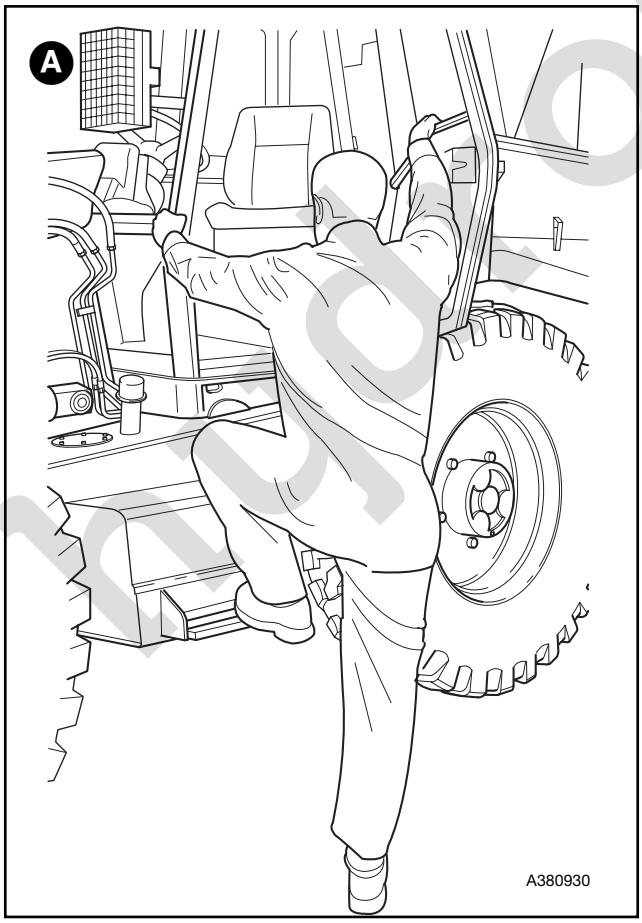

Control Lever Locks

To prevent the loader arms and the backhoe from being accidentally operated when the driver is entering or leaving the cab, or driving on the highway, safety locking pins **B** can be installed.

Always fit the locking pin before leaving the cab. Only remove the locking pin when you are correctly seated inside the cab. Put the pins in their stowage position during machine operation. This will prevent the pin from being misplaced.

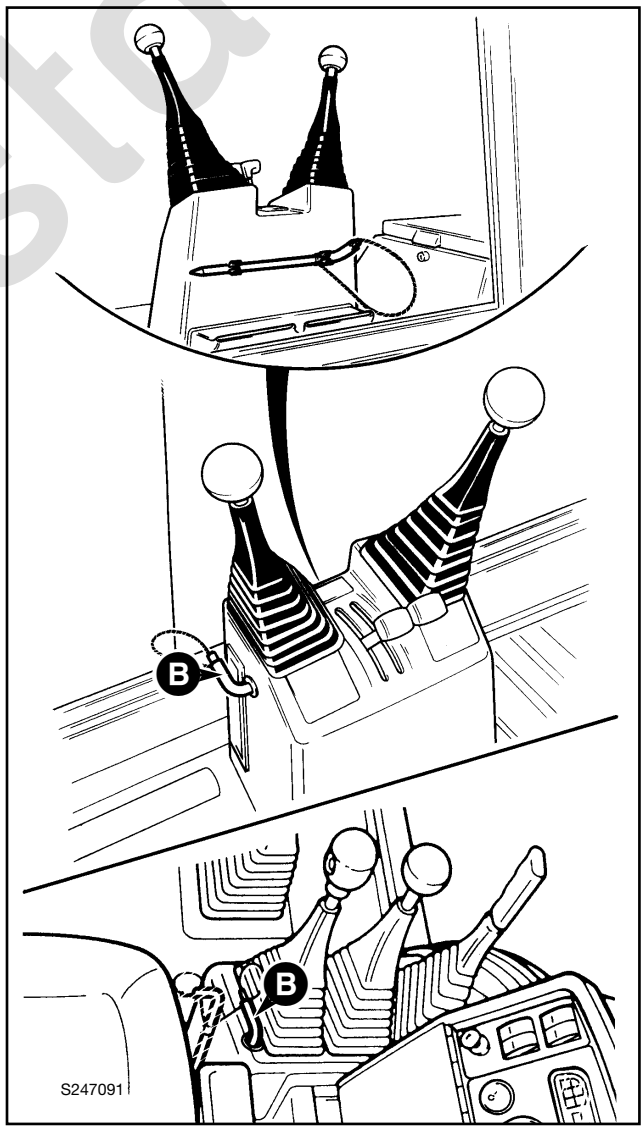

DOORS AND WINDOWS

Opening and Closing the Doors

To open a door from the outside, unlock it with the key provided and press the lock barrel. The door is fitted with an assister which will spring it open and hold it open.

Close the door from the inside by pulling it firmly; it will latch itself. To open the door from the inside, operate lever **A**.

If extension rod **B** is fitted, the door can be latched partly open; swing extension rod **B** towards the door and hold it there while you pull the door onto it. Make sure the door latches fully onto the extension rod.

Note: Do not drive the machine with the doors unlatched. Otherwise they could swing open.

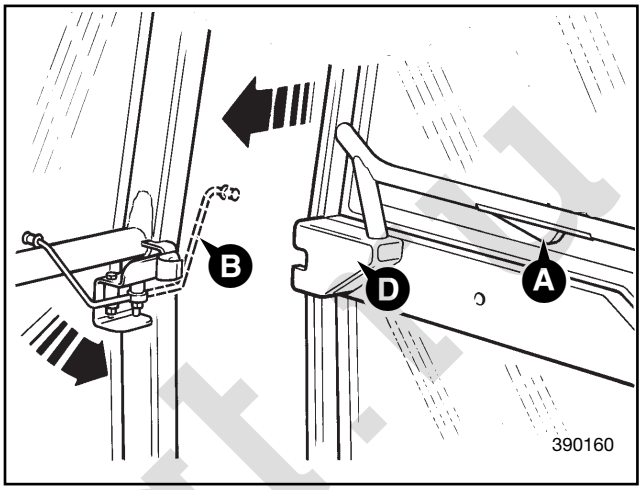

Opening and Closing the Rear Window

To open the rear window, press locking levers **A**. Lower the window to the required position, release locking levers to lock in required position.

To close the rear window, press locking levers **A**. Raise the window, release locking levers to lock.

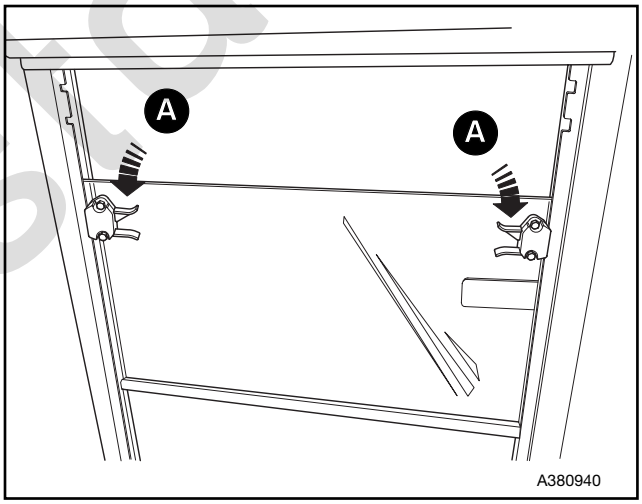

SEAT CONTROLS

The operator's seat can be adjusted for your comfort. A correctly adjusted seat will reduce operator fatigue. Position the seat so that you can comfortably reach the machine controls. For driving the machine, adjust the seat so that you can depress the brake pedals fully with your back against the seat back. The Operator's Handbook and Parts Book are located in the pouch **X** at the rear of the seat.

Headrest A (optional)

The headrest can be adjusted to suit, take hold of the rest and lift or lower as required.

Armrest B (optional)

The angle of the armrest can be adjusted, rotate the control knob clockwise to rise the armrest and anti-clockwise to lower the armrest.

Swivel C

Important Note: Before swiveling the seat, move the seat fully forward, see Fore/Aft below. The side console can be damaged if the seat is not fully forward.
To swivel lift the lever, swivel the seat all the way around to face the opposite direction then release lever. Make sure the seat fully latches into position.

Fore/Aft D

To move the seat fore and aft, lift the bar and slide the seat to the position you want, release the bar to lock the seat. Make sure the seat is locked in position.

⚠ WARNING

Whilst seated, adjust the dial on the left of the seat until your weight in kgs appears in the red shaded area. Failure to set the weight adjustment dial will reduce the beneficial isolation effect of the seat suspension and may result in personal discomfort or injury.
2-2-1-12

Weight E

Whilst seated, turn the weight adjustment dial until your weight is shown in the red shaded area of the dial. This will set the seat to the most suitable support for your weight. The dial is calibrated in kilograms (kg).

Backrest Angle F

Press your back firmly against the backrest. Lift the control lever and position the backrest as required. When the backrest is in position release the control lever. Make sure the backrest has locked in position.

Height and Slope G (rear)

To raise or lower the rear of the seat lift the control lever. Allow the seat to move into position and then release the lever. Make sure the seat has locked in position.

Height and Slope H (front)

To raise or lower the front of the seat lift the control lever. Allow the seat to move into position and then release the lever. Make sure the seat has locked in position.

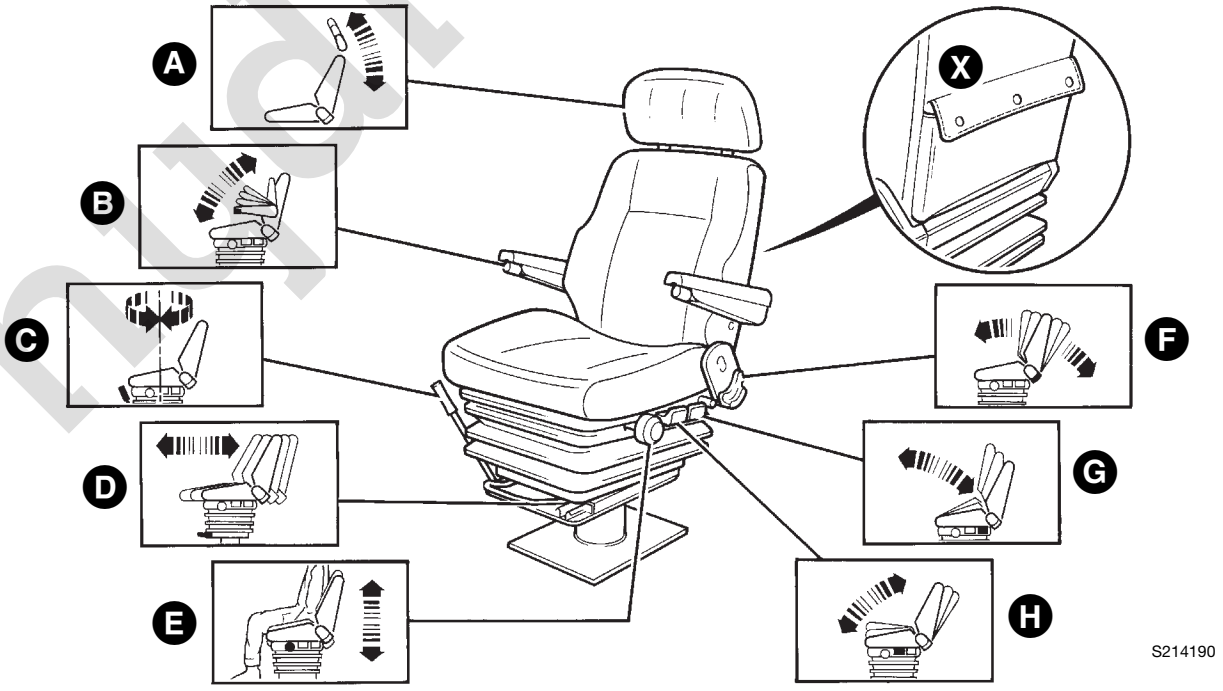

8642 - 1

SEAT BELT

⚠ WARNING

The ROPS cab is designed to give you protection in an accident. If you do not wear your seat belt you could be thrown about inside the cab, or thrown out of the machine and crushed. You must wear a seat belt when using the machine. Fasten the seat belt before starting the engine.

2-2-1-9

⚠ WARNING

Do not use a seat belt which is damaged or excessively worn.

Do not use a seat belt that has been in an accident.

A worn, damaged or already stressed seat belt could break or give way in a collision. If that happens you could be killed or injured.

2-2-3-8

Fasten the Seat Belt

1 Sit correctly in the seat. Pull the belt from its reel holder in one continuous movement.

2 Push the male fitting **A** into the buckle **B** until it latches into position. Make sure the seat belt is not twisted and that it is over your hips not your stomach.

Note: If the belt 'locks' before the male fitting **A** has been engaged, allow the belt to fully retract in its reel holder and then try again. The inertia mechanism may lock if you pull the belt too sharply or if the machine is parked on an incline. In such cases, ease the belt gently from its reel holder.

Check the Seat Belt Is Operating Correctly

1 Sit correctly in the seat and fasten the seat belt as described.

2 Hold the middle of the seat belt as shown at **D** and tug. The seat belt should 'lock'.

⚠ WARNING

If the seat belt does not 'lock' when you check if the seat belt is operating correctly, do not drive the machine. Get the seat belt repaired or replaced immediately.

2-2-2-1

Release the Seat Belt

1 Press button **C** and pull the male fitting **A** from the buckle.

2 Let the seat belt retract into its reel holder.

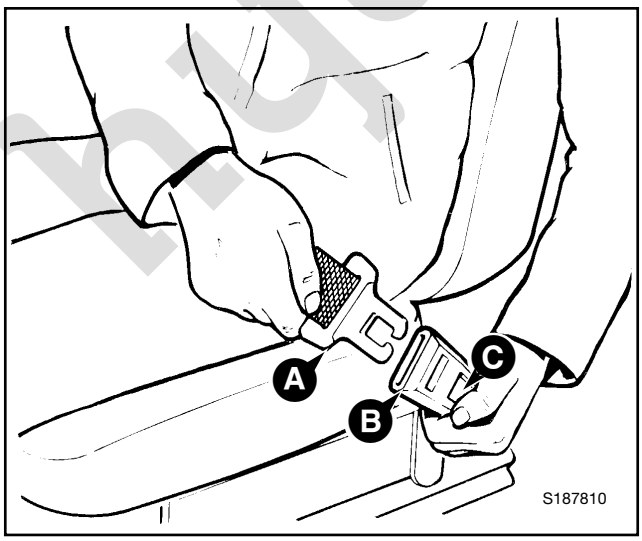

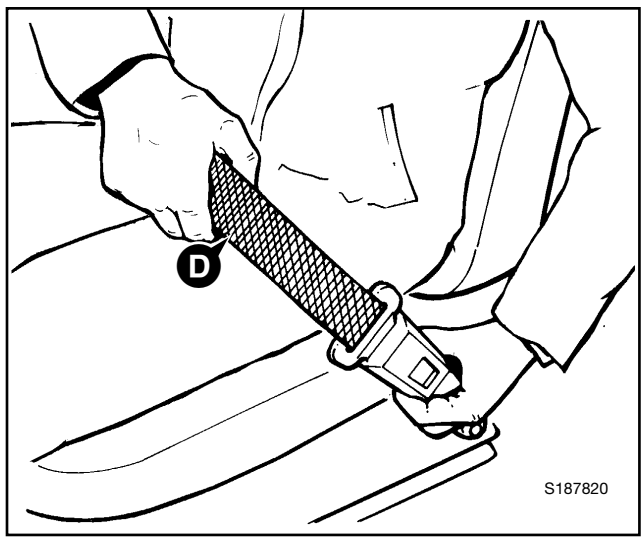

ENGINE AND DRIVE CONTROLS, SWITCHES AND INSTRUMENTS

1 Gear select switch
2 Forward/reverse lever & horn
3 Front instrument panel
4 Front console switches
5 Multi-purpose steering column switch
6 Accelerator pedal
7 Brake pedals and locking bar
8 Loader controls
9 Parking brake lever
10 Side console switches
11 Starter switch
12 Side console gauges
13 Heater controls
14 Hand throttle lever
15 Remote boom lock
16 Stabiliser controls
17 Backhoe controls
18 Steer mode select switch

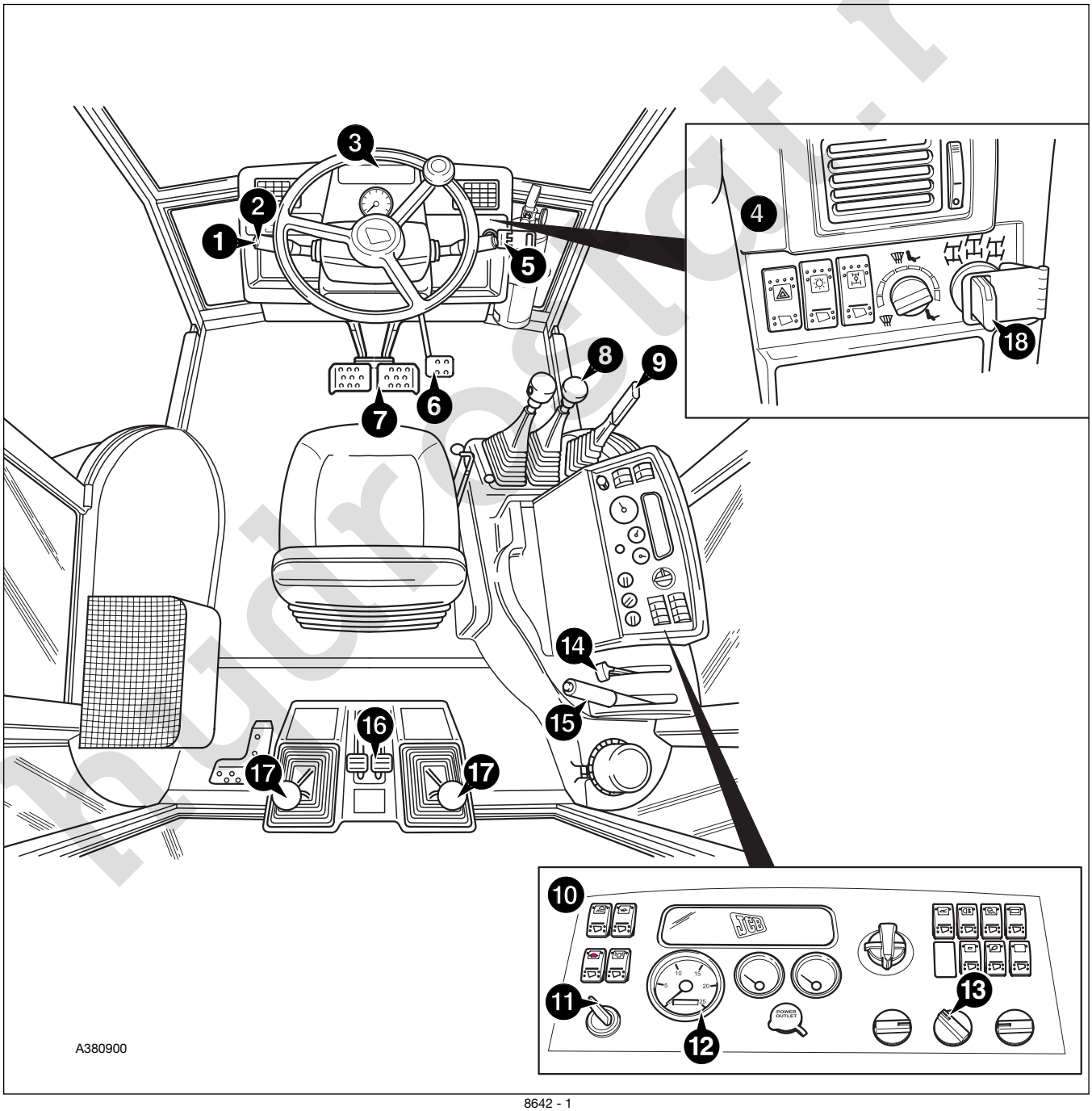

ENGINE AND DRIVE CONTROLS, SWITCHES AND INSTRUMENTS (continued)

Controls

1 Accelerator Pedal

Push this pedal down to increase engine speed. Let the pedal up to reduce engine speed. With your foot off the pedal the engine will idle.

⚠ WARNING

When driving the machine, use only the accelerator pedal to control the engine speed. Do not use the hand throttle lever to set the engine speed while driving.

2-2-2-2

2 Brake Pedal

Push down on the brake pedal to slow or stop the machine. Use the brakes to prevent overspeeding down a slope. The stop lights should come on when the brakes are applied. Do not drive the machine unless both stop lights work correctly.

There are two brake pedals. The left rear brake is operated by the left pedal. The right rear brake is operated by the right pedal. The pedals can be locked together by a steel locking bar.

⚠ WARNING

You and others can be killed or injured if the brake pedal locking bar is not engaged as recommended. If only one brake is applied for a quick stop, the machine could swerve out of control.

2-2-2-3

Separate the pedals only when driving in first gear (1) off the road. Lock the pedals together when driving in any other gear off the road. Lock the pedals together when driving on the road in any gear.

3 Gear Select Switch

⚠ WARNING

Do not change from a high gear to a low gear (for instance, 4th to 1st) in one sudden movement whilst the machine is moving. Otherwise the machine will rapidly decelerate, you or others could be killed or seriously injured. When selecting lower gears, allow the engine speed to drop before each gear change.

2-1-1-9/1

When moving or stationary, to select a gear, rotate the barrel so that the arrow marked on the barrel aligns with the required gear.

When selecting lower gears, allow the engine speed to drop before each gear change. Take notice of the warning above, do not change from a high gear to a low gear in one sudden movement whilst the machine is moving. Otherwise the machine will rapidly decelerate.

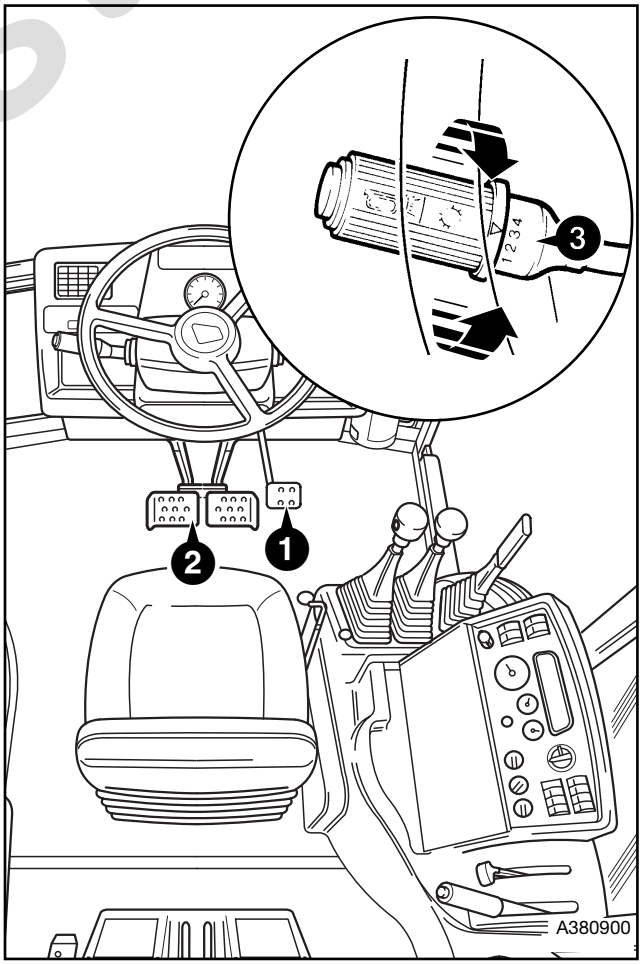

8642 - 1

ENGINE AND DRIVE CONTROLS, SWITCHES AND INSTRUMENTS (continued)

Controls (cont'd)

4 Forward/Reverse Lever & Horn

⚠ WARNING

You and others can be killed or injured if you operate the forward/reverse lever while travelling. The machine will immediately reverse direction without warning to others. Follow the recommended procedure for proper use of this selector.

2-2-2-4

Stop the machine before moving this lever. To select forward, reverse or neutral, 'lift' and move the lever to the required position. All four gears are available in both forward and reverse. The engine will only start if the lever is at neutral.

To reverse direction:

a Stop the machine: keep the foot brakes applied.
b Let the engine speed drop to idle.
c Select the new direction.
d Release the foot brakes and accelerate away.

Press the button on the end of the lever to operate the horn. Functions only with the starter switch at position I.

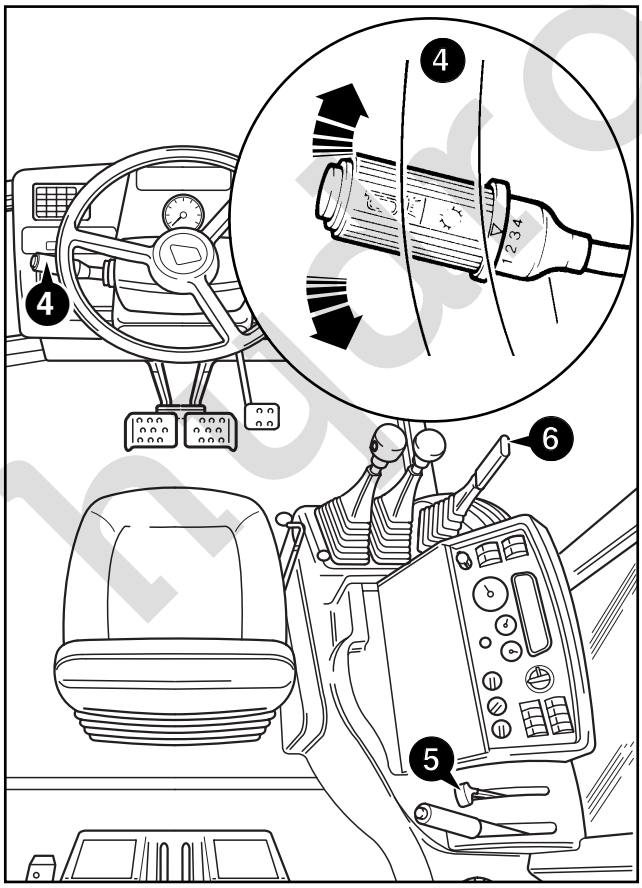

8642 - 1

5 Hand Throttle Lever

Move this lever to increase or decrease the engine speed. Pushing the accelerator pedal fully down will return the hand throttle to its idle position.

6 Parking Brake Lever

Use this lever to engage the parking brake before leaving the machine.

Note also that the transmission drive is automatically disconnected when the parking brake is engaged.

⚠ CAUTION

The parking brake must not be used to slow the machine from travelling speed, except in an emergency, otherwise the efficiency of the brake will be reduced. Whenever the parking brake has been used in an emergency, always renew the brake pads.

4-2-1-1/1

To engage the parking brake, pull the lever up (vertical). Check that the indicator light comes on.

To release the parking brake, lower the lever as far as it will go (horizontal). Check that the indicator light goes out.

ENGINE AND DRIVE CONTROLS, SWITCHES AND INSTRUMENTS (continued)

Multi-Purpose Steering Column Switch

1 **Direction Indicators** (Right)
Pull the lever towards you to indicate a right turn. Switch the indicators off when you have completed the turn. Functions only with the starter switch at position I.

2 **Direction Indicators** (Left)
Push the lever away from you to indicate a left turn. Switch the indicators off when you have completed the turn. Functions only with the starter switch at position I.

3 **Windscreen Wiper**
Rotate the lever barrel to switch the windscreen wipers on and off. The following functions are available (only with the starter switch turned on).

I On **0** Off

The wipers will self-park when switched off.

4 **Windscreen Washer**
Push the button towards the steering wheel to operate the windscreen washer. Functions only with the starter switch at position I.

5 **Headlights Flash**
Lift the lever to flash the headlights. Functions only with the starter switch at position 1.

6 **Headlight/Mainbeam**
Push the lever down for high beam. Centre position is dipped beam. Functions only with the side/head lights on.

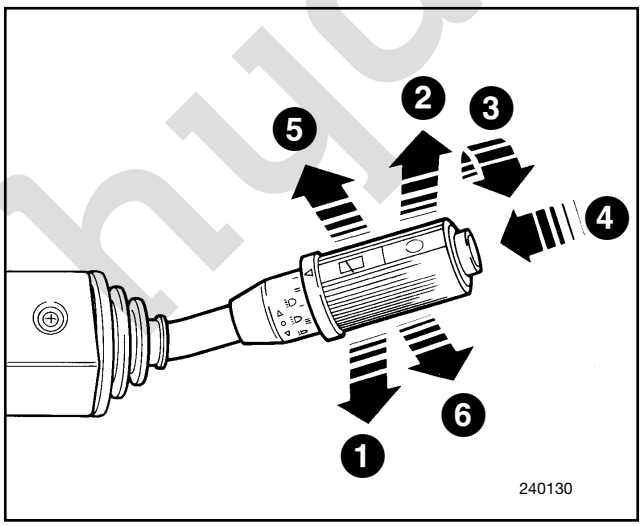

Front Console Switches

Each switch has an insert with a graphic symbol, this symbol and the switch descriptions are detailed below.

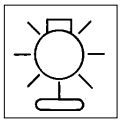

Side Lights and Headlights
Press once to switch on the side lights. Press again to switch on the headlights.

Hazard Warning Lights
Press to switch on the hazard warning lights. A light on the instrument panel flashes with the outside lights.

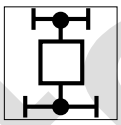

2/4 Wheel Drive Select Switch
Refer to ***2/4 Wheel Drive Select Switch****, this section.* Illuminates when 2 wheel drive is selected.

ENGINE AND DRIVE CONTROLS, SWITCHES AND INSTRUMENTS (continued)

Side Console Switches

Each switch has an insert with a graphic symbol, this symbol and the switch descriptions are detailed below.

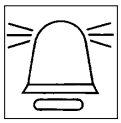

Beacon
Press to switch on the flashing beacon.

Front Work Lights

⚠ WARNING

Do not drive on the road with the work lights switched on. You can dazzle other drivers and cause an accident.
2-2-2-5

Press to switch on the front work lights. The work lights will work independently of the main lights circuit (see note).

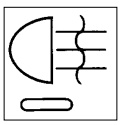

Rear Fog Light
Press down to switch on high intensity fog light. Functions only with side and headlights on.

Smooth Ride System
Press down to switch on Smooth Ride System. The switch is illuminated when ON. Refer to ***Preparing The Machine For Travel***, *this section.*

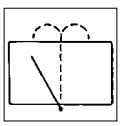

Rear Window Wiper (if fitted)
Press to switch on the rear window wiper. Press again to operate the washer (if fitted). Note that the wiper will self-park when switched off.

Rear Work Lights
Press down to switch on the rear work lights. The work lights will work independently of the main lights circuit.

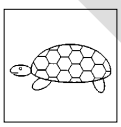

Hydraulic Speed Control
Refer to ***Hydraulic Speed Control***, *this section.*

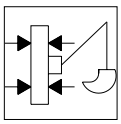

Hydraclamps
Refer to ***Sideshifting the Backhoe - Powered***, *this section.*

Auxiliary Circuit Enable Switch (if fitted)
Refer to ***Hydraulic Tool Circuit***, *OPTIONAL ATTACHMENT section.*

Return To Dig Enable Switch (if fitted)
Refer to ***Loader Controls***, *OPERATION section.*

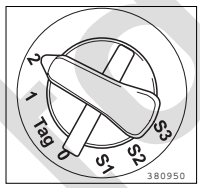

Master Blackout Switch

The master black out switch is fitted allowing illumination, including reversing and stop lights and any audible alarms, to be extinguished as required. The switch will not de-activate the hour meter or warning lights that indicate equipment failure.

Switch position

2	All functions normal.
1	As 2 but isolates headlights and fog lights.
TAG	Only hazard, steer mode warning, direction indicators and rear brake lights function.
0	Only engine warning lights function.
S1	Only engine warning lights and convoy lights function.
S2	As S1 but with front side lights.
S3	As S2.

ENGINE AND DRIVE CONTROLS, SWITCHES AND INSTRUMENTS (continued)

2/4 Wheel Drive Select Switch

Press rocker switch **A** UP for 4-wheel drive, the light will go OFF.

Note: With 2-wheel drive selected, when the brake pedal is pressed, the machine will automatically go into 4-wheel drive and the indicator light on the switch will come on.

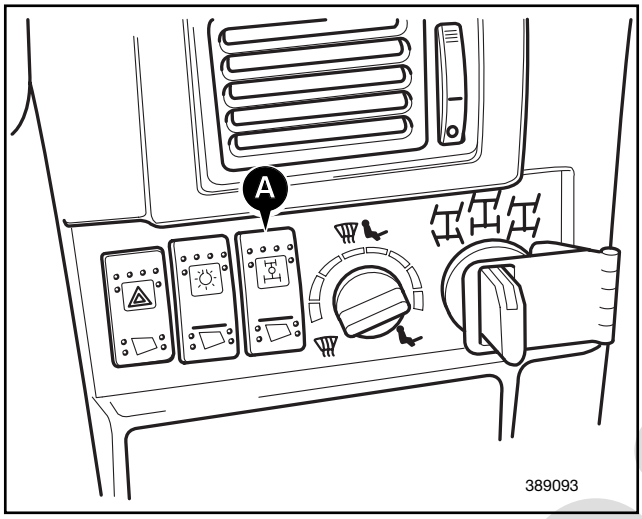

Cab Interior Light

Plug the interior light into the 24 volt auxiliary socket **C** and press rocker switch **D** on the side of the light to switch ON/OFF.

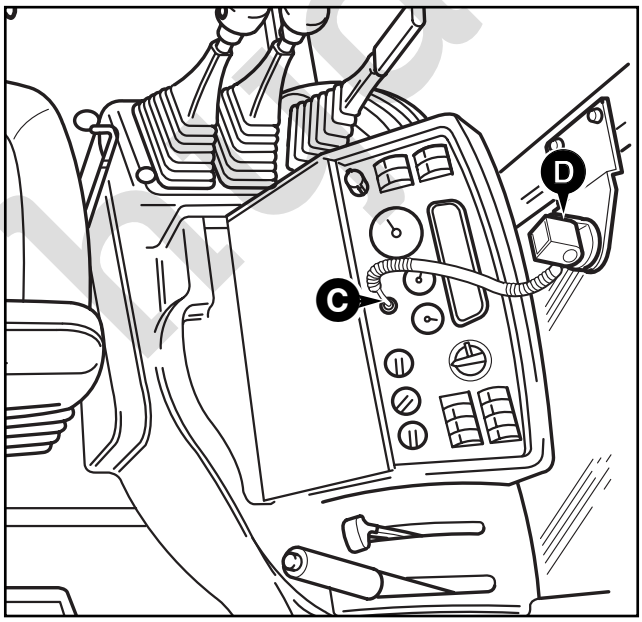

Starter Switch

This is operated by the starter key **B**. It has four positions. The key can be removed only with the switch set to **'O'**.

Off/Stop Engine
Turn the key to this position to stop the engine. Make sure the transmission is in neutral, the attachments have been lowered and the parking brake is engaged before stopping the engine.

'IGN' On
Putting the switch to this position connects the battery to all the electrical circuits except the lights and the 4-way flashers warning circuit. (The lights and hazard warning circuits are permanently live.) The starter key will spring back to this position when it is released from **II** or **III**.

Heat Position
Holding the key in the heat position warms the engine induction manifold for cold weather starting. Do not hold in this position for more than 15 seconds.

Start Position
Operates the starter motor to turn the engine.

Note: Do not operate the starter motor for more than 20 seconds at one time. Let the starter motor cool for at least two minutes between starts.

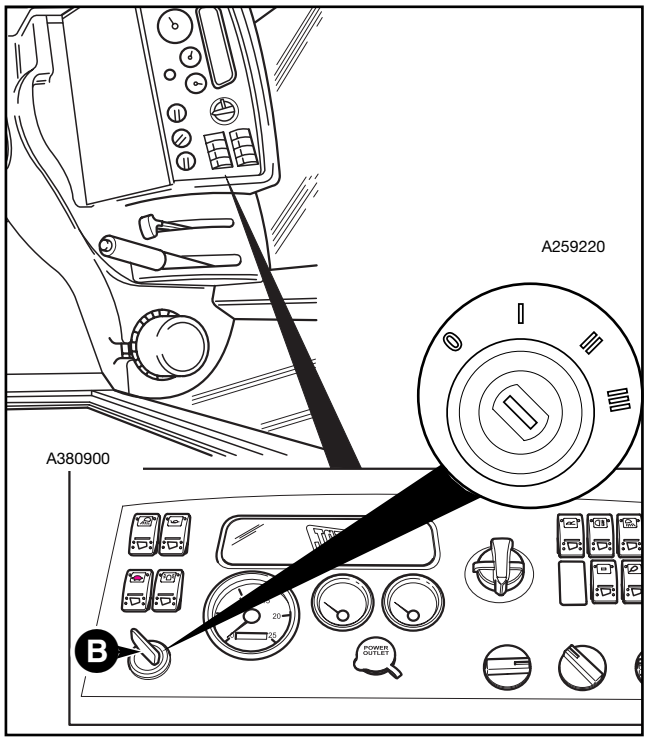

ENGINE AND DRIVE CONTROLS, SWITCHES AND INSTRUMENTS (continued)

Steer Mode Selector Switch

This is a three-position rotary switch, equipped with a hinged lockplate. The lockplate enables the selector switch to be locked into the 2-wheel steer mode, when the machine is driven on public roads.

Indicator lights on the instrument panel tell you what steer mode the machine is in. If you have any doubt about the steer mode the machine is in, always remember that it is the indicator light which is correct.

Never change steer mode on the move, the machine should be stationary. Only change the steer mode when the engine is at low engine rpm/idling. Never change from 4 wheel steer to crab steer (or vice versa) without first selecting 2 wheel steer for approximately 5 seconds (as shown by the decal **A**).

1 **2-Wheel Steer**
The front wheels only are controlled by the steering wheel. This position must be used for driving on public roads. Make sure the hinged lockplate is engaged.

2 **4-Wheel Steer**
The front wheels steer one way and the rear wheels steer in the opposite direction. This position provides the tightest turning circle.

3 **Crab Steer**
The front and rear wheels steer in the same direction. This position improves manoeuverability in confined spaces.

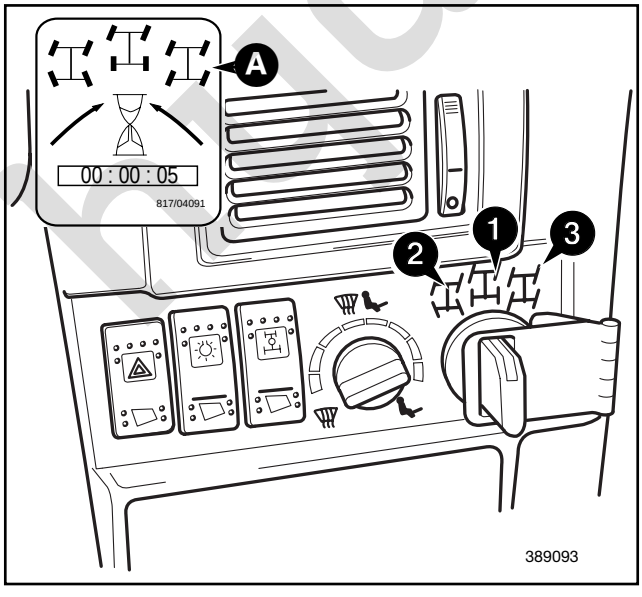

8642 - 1

Re-phasing the Steer System

4 Wheel Steer Machines Only

⚠ WARNING

Failure to phase 4-wheel steer at least once per day may mean a reduction in steering effectiveness.
5-2-1-6

The steering must be re-phased:

i At the start of each working period

ii At least once per day.

ii If having difficulty in steering.

Follow the procedures below for re-phasing the steer system:

1 **Select 2-wheel steer.**
Sensors on the axles prevent the steer mode from changing until the wheels straighten up or pass through the 'straight ahead' position. Because of this, there will be a short period when the indicator lights do not agree with the switch position.

2 **Operate the machine until the rear wheels straighten up.**
When the rear wheels straighten up the machine will go into 2-wheel steer. The indicator light will show when 2-wheel steer has engaged.

3 **Select 4-wheel steer again**
The front and rear wheels are now back in phase.

ENGINE AND DRIVE CONTROLS, SWITCHES AND INSTRUMENTS (continued)

Instruments

All instruments power down when the starter switch is set to **O**, apart from the hazard warning lights indicator.

Front Console

The driving indicators and gauges are located at the side of the driver's seat.

On the front console **A** the master warning light **B** will illuminate when any of the following warning lights on the side console are illuminated:

Air Filter Blocked; Water Temperature; Transmission Oil Temperature; Engine Oil Pressure; Parking Brake Engaged; Transmission Oil Pressure.

1 **Speedometer**
Indicates the road speed, the outer ring is MPH and the inner ring is kph.

Note: The 2 wheel steer indicator light is provided with a night combat shade as shown at **C**. When the shade is lowered, the indicator light is visible through the small pin-hole **D**.

Side Console

1 **Tachometer**
Indicates the engine speed in revolutions per minute (**RPM**). A green band on the scale indicates the RPM which gives best fuel economy. Operate within that band whenever possible.

2 **Hourmeter**
Records the total running time of the engine. Use it to keep a check of running hours during maintenance intervals.

3 **Fuel Gauge**
Indicates the level of diesel fuel in the tank. Do not let the tank run dry, or air will enter the fuel system.

4 **Coolant Temperature Gauge**
Indicates the temperature of the engine coolant. The gauge pointer will gradually swing upwards as the coolant temperature rises.

Note: The 2 wheel steer, 4 wheel steer and crab steer indicator lights are provided with a night combat shade as shown at **X**. When the shade is lowered, the indicator lights are visible through the small pin-holes **Y**.

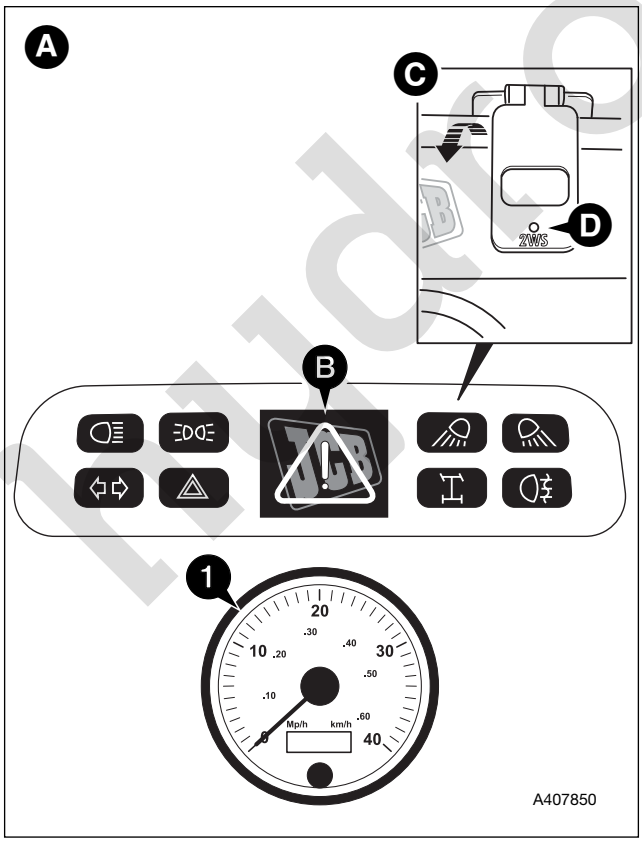

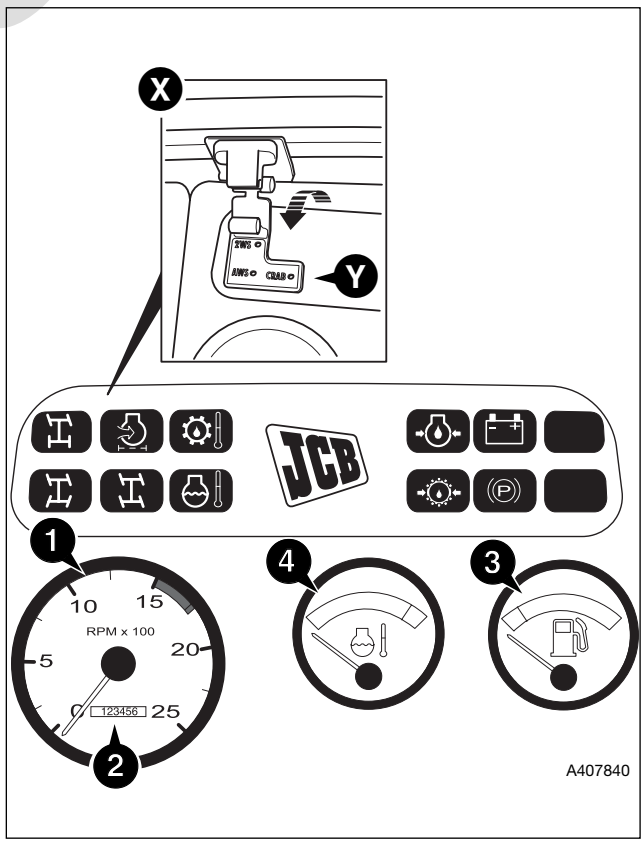

ENGINE AND DRIVE CONTROLS, SWITCHES AND INSTRUMENTS (continued)

Instruments (cont'd)

Warning Lights

Main Beam On
Lights up when the headlight main beams are switched on. Switch the main beams off for on-coming vehicles.

Hazard Warning
Flashes with the hazard warning lights (even with the starter switch at O). Switch the flashers on whenever your machine is a possible hazard.

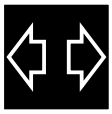

Direction Indicators
Flashes with the direction indicators. Use the indicators to signal before turning the machine.

Sidelights
Lights up when the sidelights are switched on.

Front Work Lights
Lights up when the front work lights are switched on.

Rear Work Lights
Lights up when the rear work lights are switched on.

Parking Brake Engaged
Lights when the parking brake is engaged with the machine in forward or reverse.

2 Wheel Steer Engaged
Lights up when 2 wheel steer is selected.

4 Wheel Steer Engaged
Lights up when 4 wheel steer is selected.

Crab Steer Engaged
Lights up when crab steer is selected.

Warning Lights with Audible Alarm

Note: If any of the following lights come on while the engine is running, stop the engine as soon as it is safe to do so. Do not use the machine until the fault is put right.

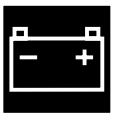

No Charge
Lights if the battery charging circuit fails while the engine is running. The light should go out a few seconds after the engine is started.

Water Temperature High
Lights if the engine coolant overheats.

Engine Oil Pressure Low
Operates if the engine oil pressure drops too far. The light should go out when the engine is started.

Transmission Oil Pressure Low
Lights if the transmission oil pressure drops too far. The light should go out when the engine is started.

Transmission Oil Temperature High
Lights if the transmission oil temperature rises too far.

Air Filter Blocked
Lights if the engine air filter clogs up.

HEATER CONTROLS

The heater system is controlled by the following switches:

A - Re-circulation Switch
B - Three Speed Fan Switch
C - Temperature Control Switch
E - Air Distribution Control Switch

Heater Controls

Hot air can be directed to the front windscreen (for demisting) and/or the cab floor by operating control **E**. The temperature can be adjusted by operating control **C**. A heater control switch **B** controls a three speed heater fan.

Air Control
Rotate control **E** anti-clockwise to direct more air to the front windscreen. Rotate clockwise to direct more air to the cab floor. With the control in the middle, air is directed to both areas.

Rotate control **A** to position **1** to allow fresh air to enter the cab. Position **2** gives re-circulated air and should be used when operating in a dusty working environment. Position **2** can also be used to increase the heater performance during cab warm up, and whilst operating the machine on light duties.

Heat control
Rotate control **C** clockwise to increase the temperature. Rotate anti-clockwise to decrease the temperature.

Heater Fan (Three Speeds)
Rotate control **B** to switch on the cab three speed heater fan. Functions only with the starter switch at IGN.

Air Conditioning Controls

To operate the air conditioning, press switch **D** to the ON position (the switch will be illuminated).

The air conditioning controls operate in the same manner as described for 'Heater Controls', except cool de-humidified air is directed via vents into the cab (not heated air).

Rotate the control **C** anti-clockwise to decrease the temperature from ambient to cold. To obtain best results from the air conditioning system ensure that all doors and windows are closed.

Air conditioning performance is improved when the re-circulation switch **A** is in position **2**.

Power Outlet

A power outlet socket **F** is located on the side console. Auxiliary electrical eqiupment such as a light can be connected to the socket. Note that the power supply from the socket is 24V, DO NOT connect 12V equipment.

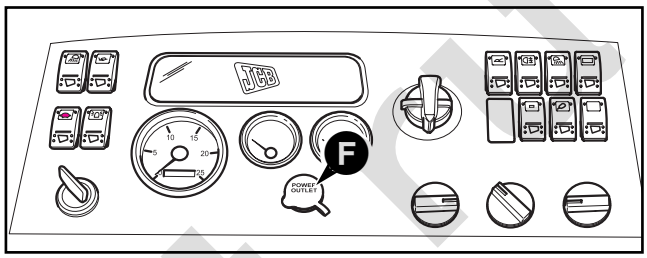

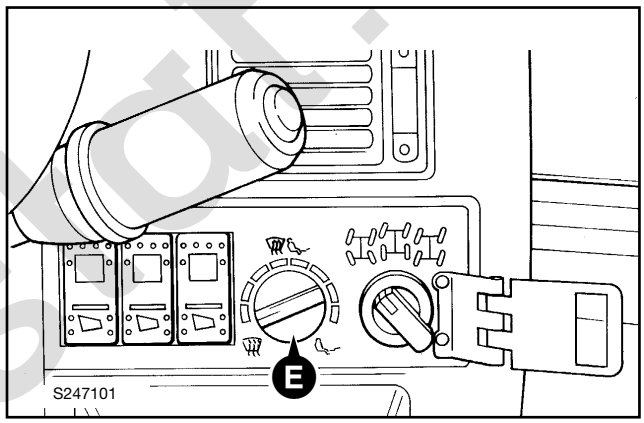

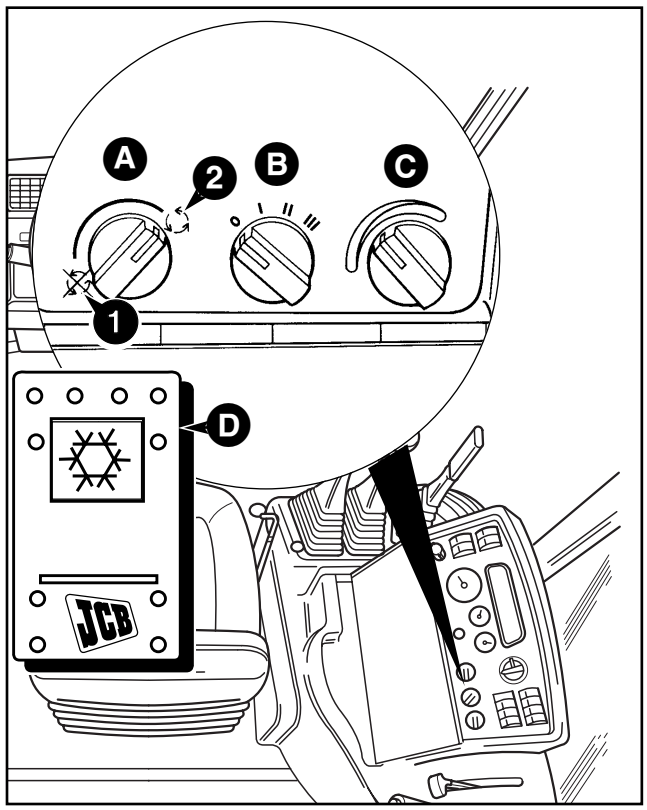

LOADER CONTROLS

Hydraulic Speed Control

Pressing the hydraulic speed control (HSC) button(s) causes oil flow from the second section of the hydraulic pump to be dumped directly back to the hydraulic tank. The applications for this control are:

1 More tractive force available to the loader when entering a stockpile.

2 More power from the engine made available whilst travelling on the highway, giving improved fuel economy.

3 Reduced backhoe speed when placing objects.

To use the HSC when travelling on the highway, press the rocker switch **A** into the 'ON' position. The switch will illuminate when the HSC is on.

To use the HSC intermittently (for instance, when entering a stockpile) or to temporarily override rocker switch **A** when in the 'ON' position, press the pushbutton **B** as required.

Note: When the gear select switch is in the 4th gear position, or auto mode position 'A' the HSC facility is automatically selected. If the machine is parked (neutral selected) and the backhoe (or loader) is being used, make sure that the gear switch is not set to 4th gear or 'A', otherwise the machine operation will be slow.

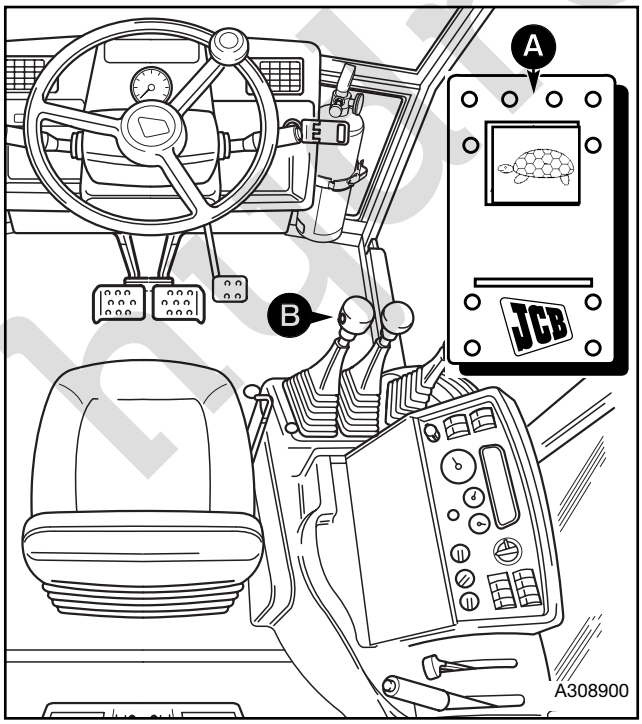

Loader Shovel

On standard machines the loader shovel is operated from a single control lever **C.** Pressing the transmission dump pushbutton **D** on the lever knob quickly disconnects the transmission from the engine. This gives more power to the loader.

For individual loader movements (raise, lower, roll forward, roll back) the lever is moved in a '+' pattern.

Combined movements can be selected by moving the lever in directions between the four main ones. For example, the shovel is raised by pulling the lever straight back; while to roll the shovel back the lever must be moved to the left.

So if you pull the lever diagonally back-and-left the shovel will both rise and roll back.

The speed of loader actions depends on how far you move the lever. The further you move it the faster the action. The lever is spring-loaded to its central (hold) position. The loader will stay in any position until you move it with the control lever except for Float and Return To Dig operations.

A plastic decal, located beside the control lever, shows by symbols what lever movements cause which loader actions. The symbols, lever movements and loader actions are described on the following pages.

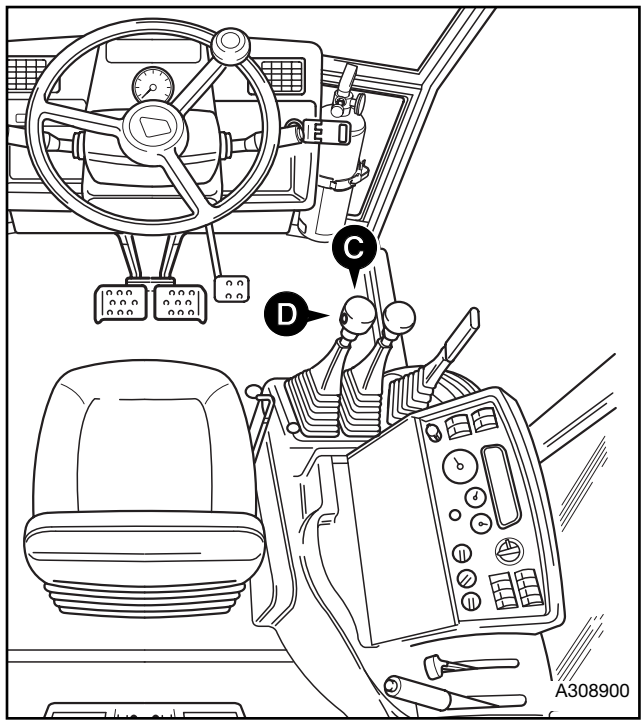

LOADER CONTROLS (continued)

Raise A

To raise the shovel, pull the lever straight back. As the shovel rises, it will stay at the same angle to the ground. This is due to the parallel linkages on the loader arms.

Lower B

To lower the shovel, push the lever forward. The shovel will stay at the same angle to the ground. This is due to the parallel linkages on the loader arms.

Roll Forward C

To roll the shovel forward push the lever to the right.

Roll Back D

To roll the shovel back pull the lever to the left.

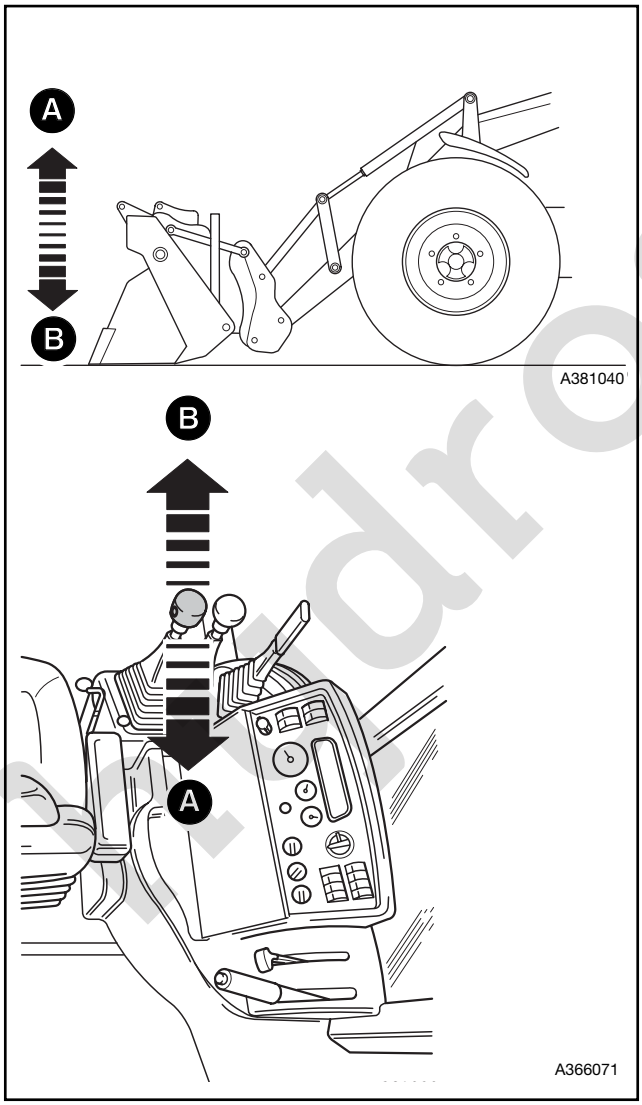

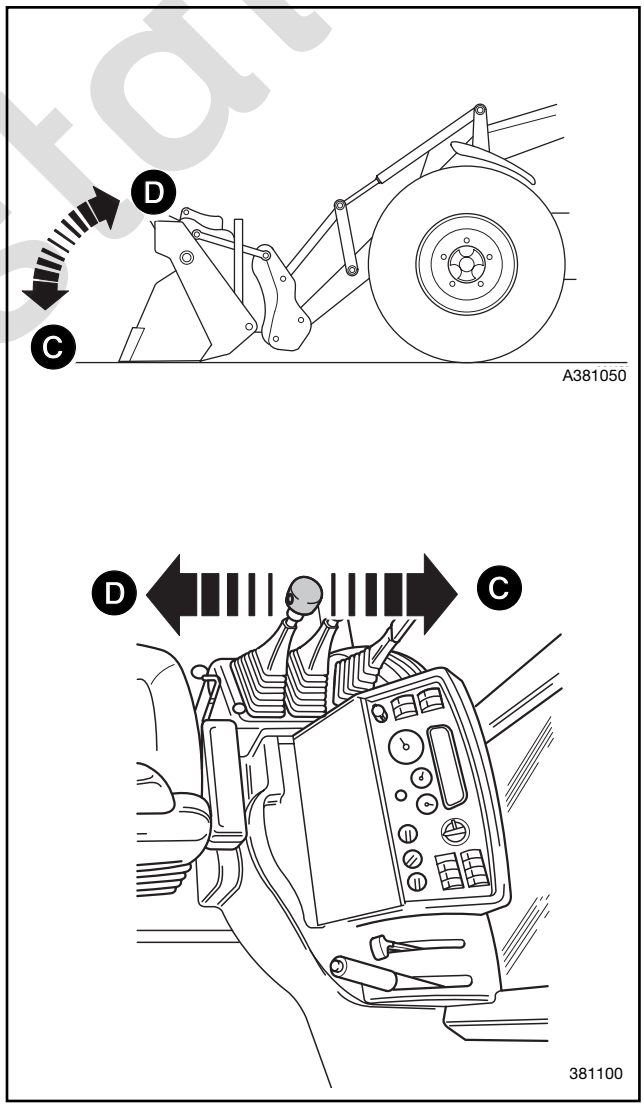

LOADER CONTROLS (continued)

Float

⚠ CAUTION

If Float is selected with the loader raised, the loader will descend to ground level and 'float' across it as you travel. You will not have control over the rate of fall.
2-2-2-7

Always lower the loader before selecting ***Float.***

To make the shovel 'float' across the ground, push the lever forwards as far as it will go and leave it there. You will feel a slight pressure on the lever as it passes through the **Lower** position.

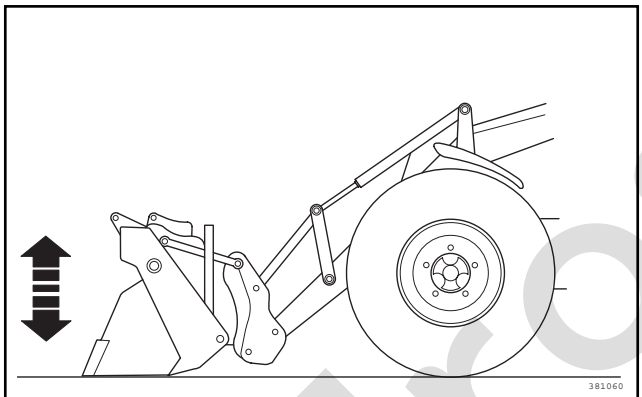

A381040

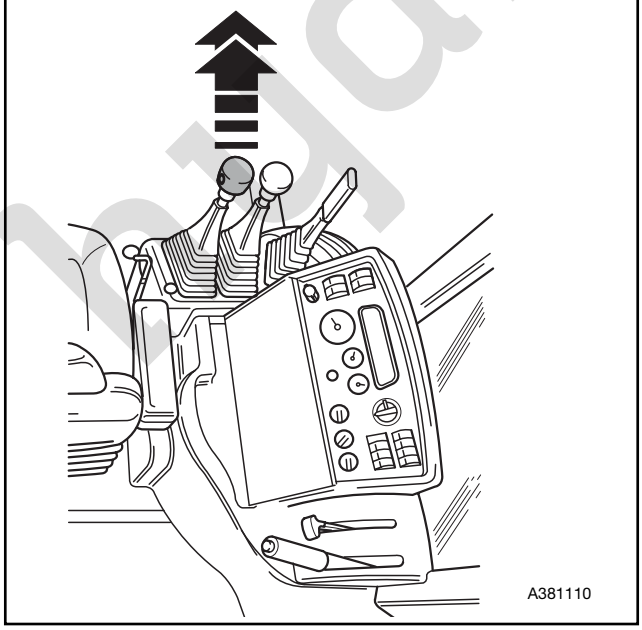

A381110

Return To Dig

This enables you to roll the shovel from the rolled forward position into the digging position quickly and easily.

When you select **Return To Dig** a switch on one of the loader arms cuts off the hydraulic pressure immediately the shovel reaches the correct angle for digging.

To select **Return To Dig**

Press the ‘return to dig enable’ switch **A** to the ON position, the switch will illuminate.

Pull the lever to the left as far as it will go. You will feel a slight pressure on the lever as it passes through the **Roll Back** position. Release the lever, it will stay in the detent position until the shovel reaches the return to dig position when the lever will automatically return to the central hold position.

When return to dig is no longer required press the enable switch to the OFF position.

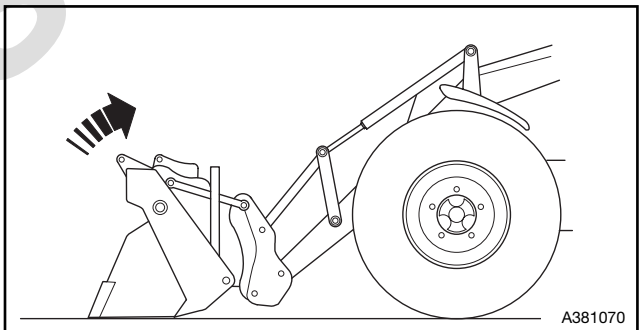

A381070

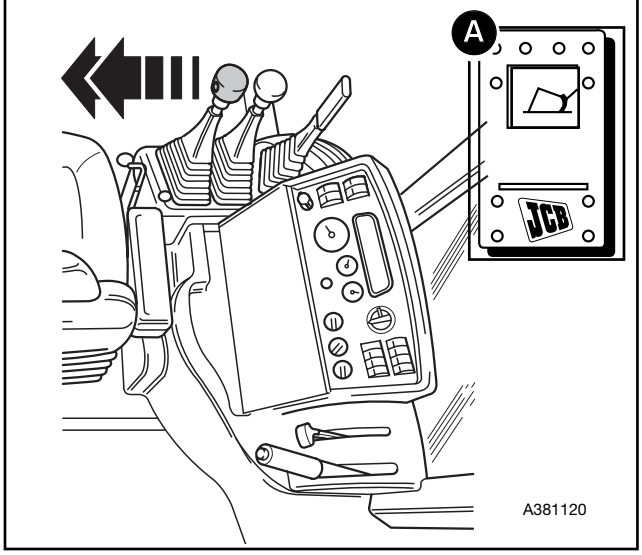

A381120

LOADER CONTROLS (continued)

Multi-Purpose Shovel

On machines fitted with a multi-purpose shovel there is a second control lever next to the standard one. On these machines, the standard lever operates as described earlier. The second lever operates the clam on the multi-purpose shovel.

The two levers can be operated at the same time to produce combined loader actions. The lever movements and their effects on the shovel are shown on a plastic decal located close to the lever.

Open Clam E

To open the clam, push the lever forward.

Close Clam F

To close the clam, pull the lever back.

Note: When a sweeper collector or leveller is used, push the lever forwards as far as it will go and leave it there. You will feel a slight pressure on the lever as it passes through the **dentent** position.

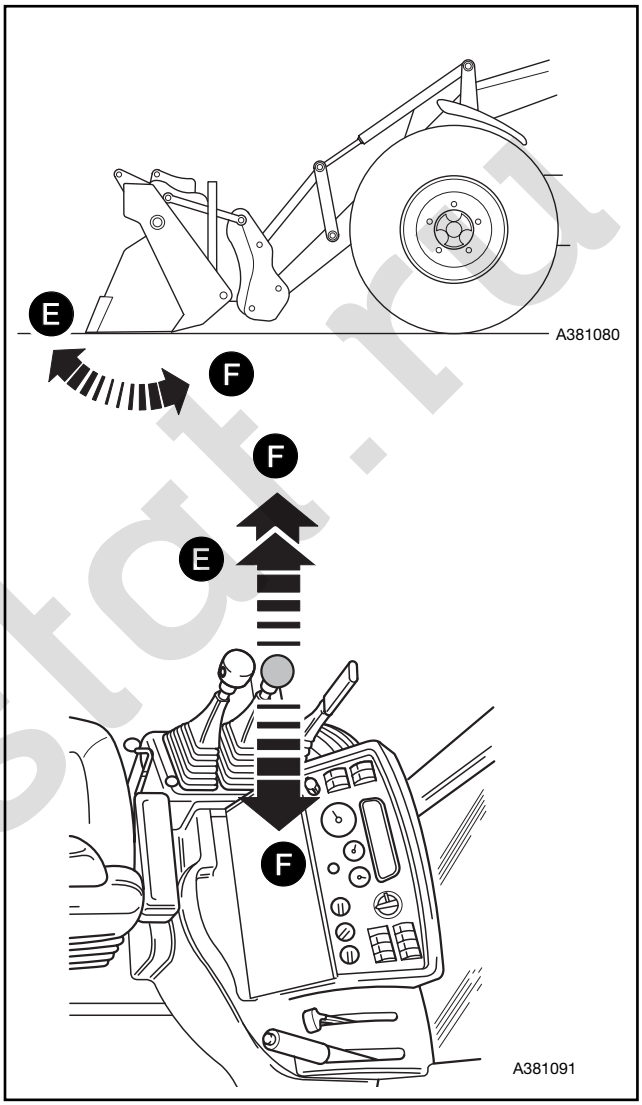

STABILISER CONTROLS

Lever Controls

⚠ WARNING

Stabilisers

Bystanders could be crushed and obstacles could be damaged if they are beneath the stabilisers while they are being lowered. Before lowering the stabilisers, make sure any bystanders are clear of the machine. Also make sure that there are no obstacles beneath the stabilisers.

2-2-2-10

⚠ WARNING

You must be sitting in the driving seat when operating the stabiliser controls.

Do not operate the stabilisers from outside the machine. Otherwise you could be crushed when the machine moves.

The stabilisers must be down when you use the excavator, or the machine will rock violently. Each stabiliser has its own control lever and can be operated independently.

Lower each stabiliser to level the machine and take the weight off of the rear tyres. The loader shovel should be used along with the stabilisers to level and steady the machine.

2-2-2-8/1

Before travelling, fully raise both stabiliser legs and if travelling on the public highway fit the control lever lock, see **Control Lever Locks**, OPERATION section.

Raise Stabilisers Ⓐ Ⓒ

To raise the stabilisers, pull the levers towards the front of the machine.

Before travelling on the public highway both stabiliser legs must be locked in the raised position. Fit pin **E** through hook **F** and secure with locking pin **G** to lock each stabiliser leg.

Lower Stabilisers Ⓑ Ⓓ

Before lowering the stabilisers, check that both stabiliser leg locks are removed.

To lower the stabilisers, push the levers towards the rear of the machine.

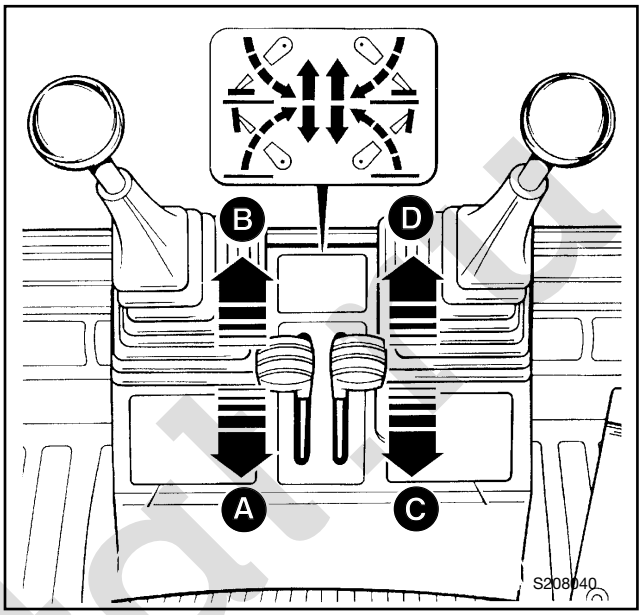

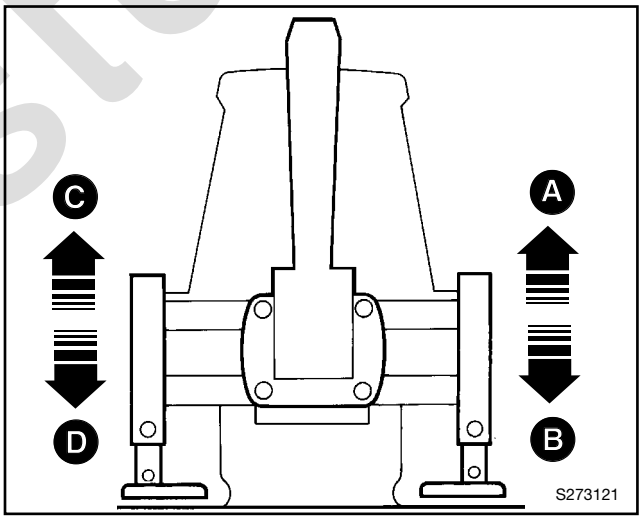

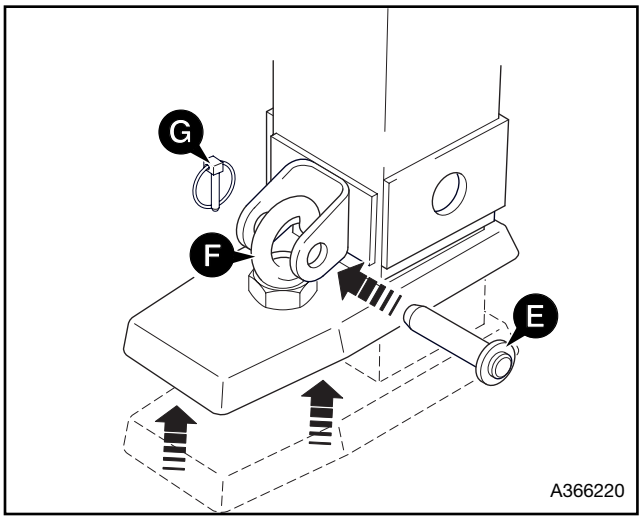

BACKHOE CONTROLS

ISO Plus ('+') Pattern

⚠ WARNING

Do not operate the backhoe controls from outside the machine, or you could be crushed by the backhoe.
2-2-3-1

On machines with ISO Plus ('+') Pattern control, there are two backhoe control levers. The left hand lever **A** operates the slew and dipper. The right hand lever **B** operates the boom and bucket. The stabilisers are operated as described in ***Stabiliser Controls*** *(OPERATION section).*

Both levers move in a '**+**' pattern for individual backhoe actions. Combined actions can be selected by moving the levers in directions between the four main ones.

Both levers can be operated at the same time, for more efficient operation. The speed of the backhoe action depends on how far you move the levers. The further you move a lever, the faster the action.

Both levers are spring-loaded to their central *(hold)* positions. The backhoe will stay in any position until you move it with the levers.

A plastic decal near the controls shows, by symbols, what lever movements cause which backhoe actions. The symbols, lever movements and backhoe actions are explained on the following pages.

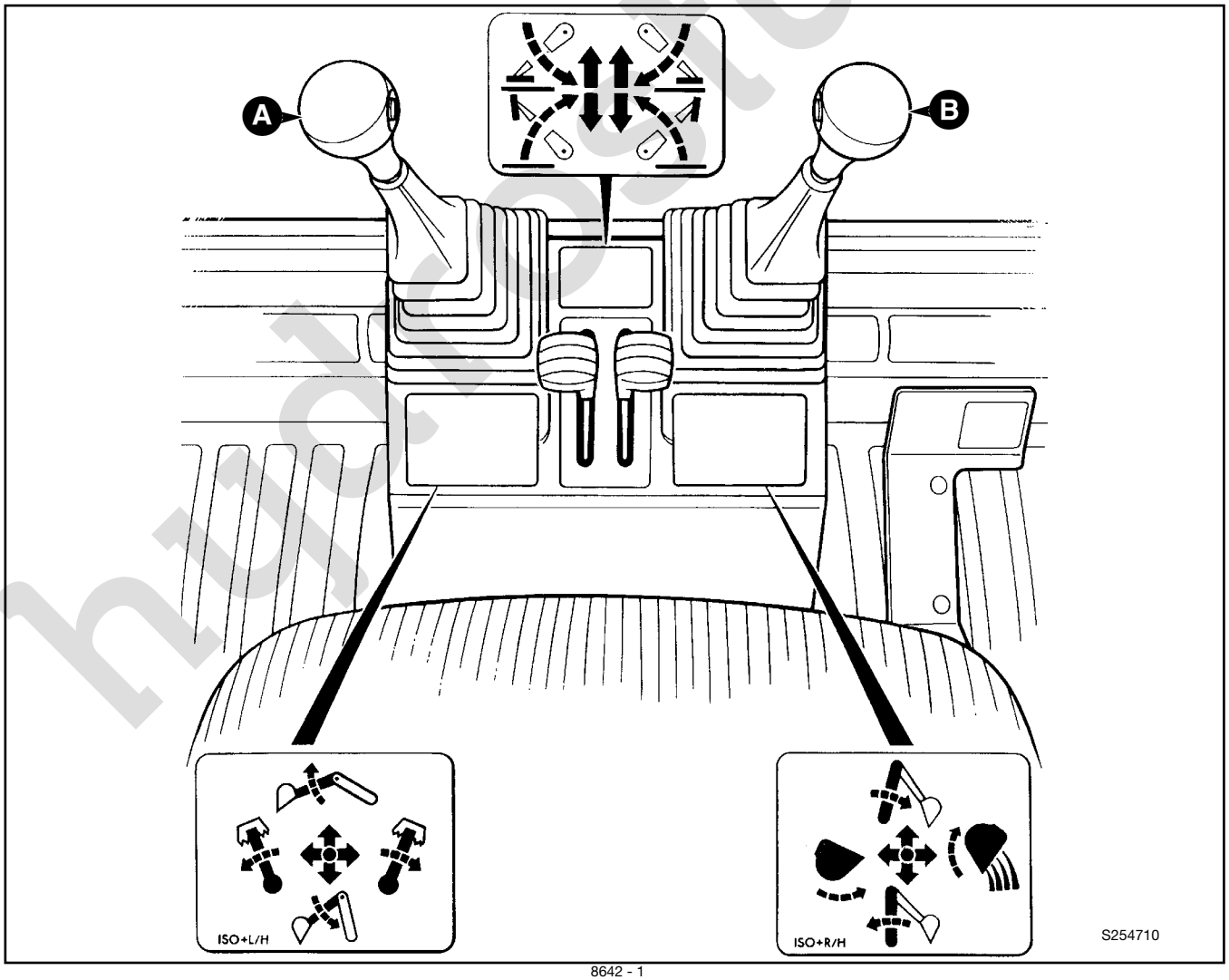

8642 - 1

BACKHOE CONTROLS (continued)

ISO Plus ('+') Pattern (cont'd)

Dipper In Ⓐ

To bring the dipper in, pull the lever towards the front of the machine.

Note: Some backhoe attachments may collide with the boom if brought too far in. Check this before using different attachments.

Dipper Out Ⓑ

To push the dipper out, push the lever towards the rear of the machine. If the boom is already up, check that it is clear overhead before swinging the dipper out.

Slew Left Ⓒ

To slew the boom to your left, move the lever to your left.

Note: Some backhoe attachments may collide with the stabiliser legs if slewed too far round. Check this before using different attachments.

Slew Right Ⓓ

To slew the boom to your right, move the lever to your right.

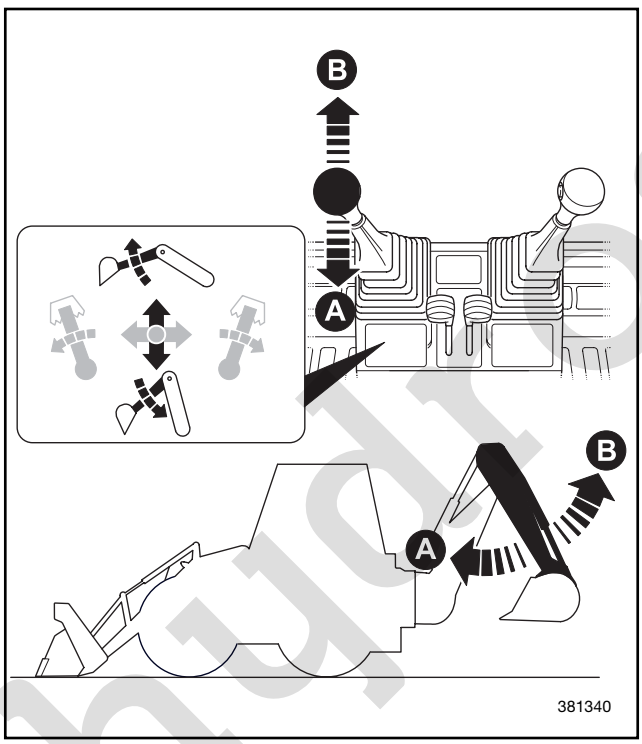

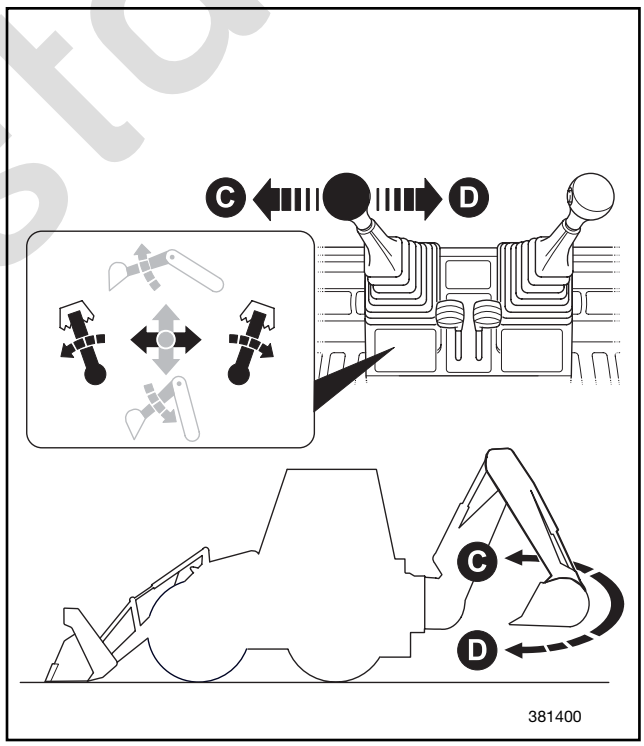

BACKHOE CONTROLS (continued)

ISO Plus ('+') Pattern (cont'd)

Raise Boom E

To raise the boom, pull the lever towards the front of the machine. Before raising the boom check that it is clear overhead.

Lower Boom F

To lower the boom, push the lever towards the rear of the machine.

Close Bucket G

To close the bucket (to gather a load) move the lever to your left.

Open Bucket H

To open the bucket (to dump a load) move the lever to your right.

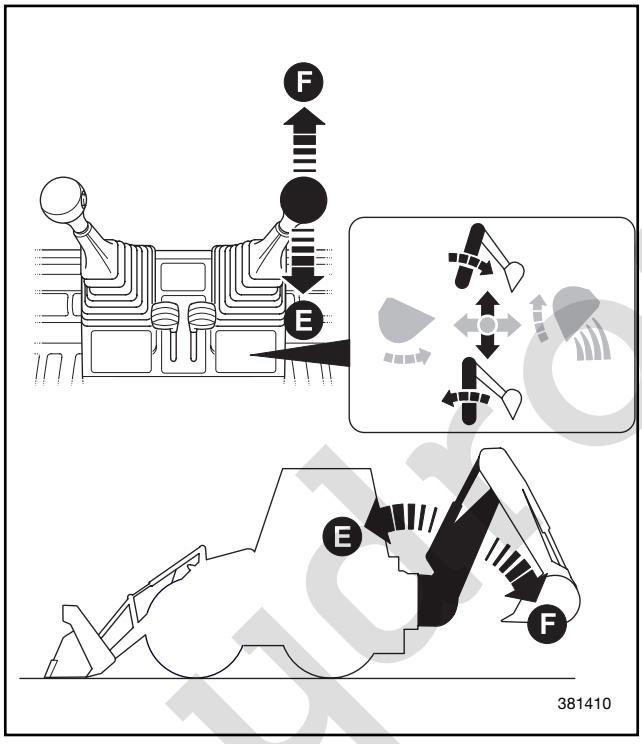

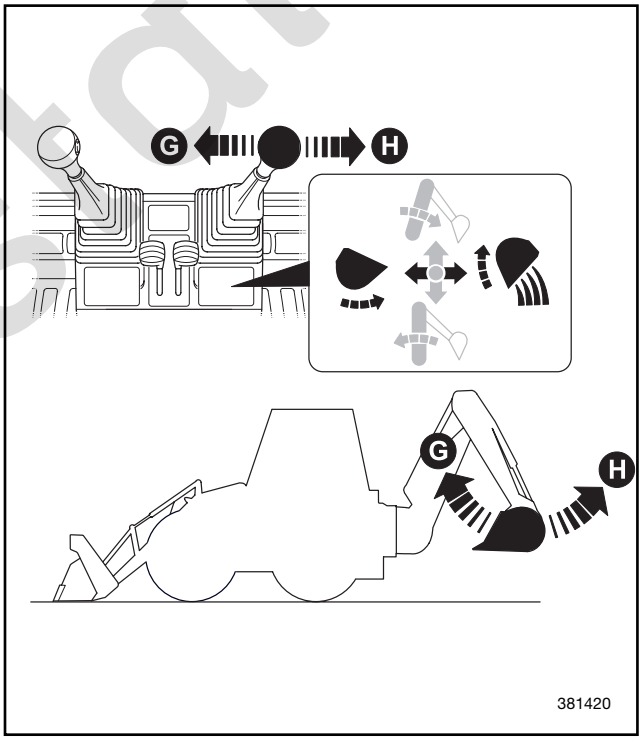

BACKHOE CONTROLS (continued)

Backhoe Foot Pedal Control

Some machines have a foot operated pedal **A**. This can be used to operate various options such as auxiliary attachments.

A plastic decal, located on the pedal, shows the pedal and the attachment movements.

The pedal is the rocking type, operated by heel-and-toe. It is spring-loaded to its mid-position. Speed of operation depends on how far the pedal is pressed down. The attachment will stay in any position until you move it with the pedal.

For auxiliary operation, refer also to ***Backhoe Attachment Operation*** *(OPTIONAL ATTACHMENTS section).*

Kingpost Clamps

On sideshift machines only, the kingpost assembly must be 'clamped' to the cross rails before starting any excavation work. See ***Sideshifting the Backhoe*** (*OPERATION* section) for detailed instructions on how to move the kingpost and backhoe assembly across the rails.

Release Clamps

To release the clamps, press switch **B** on, switch light illuminated.

Tighten Clamps

To enable the clamps to tighten, press switch **B** off.

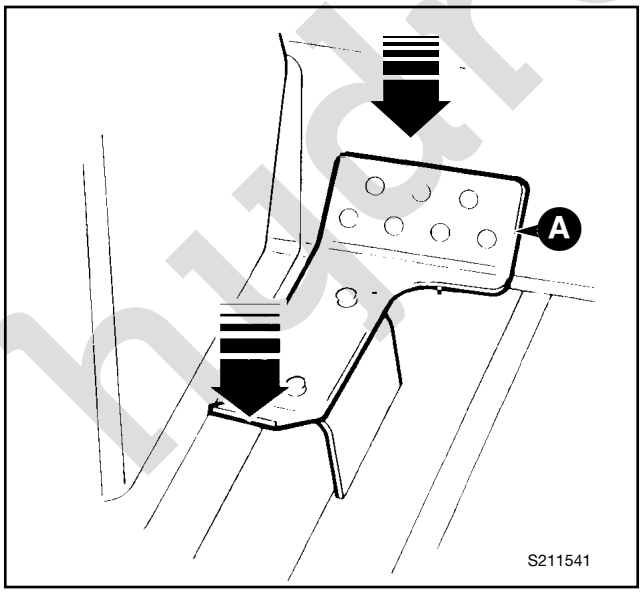

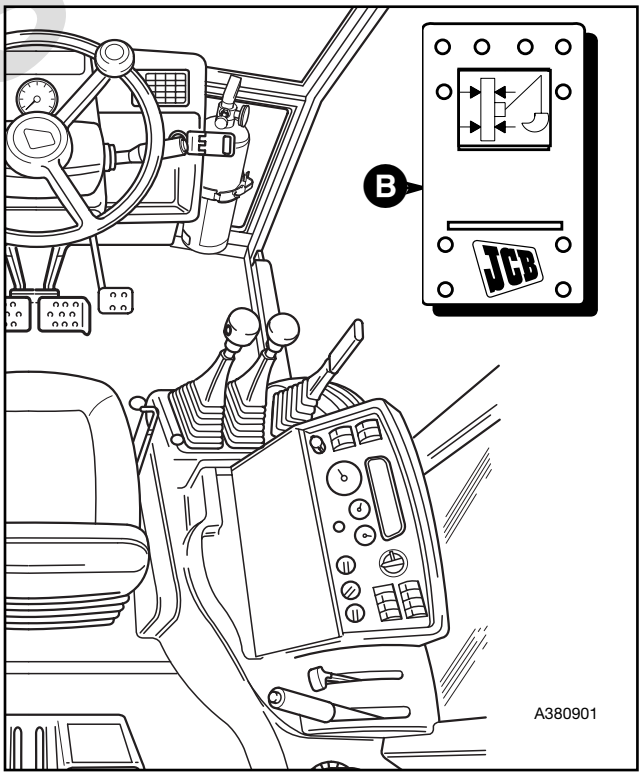

BOOM AND SLEW LOCKS

Boom Lock

We recommend that the boom lock and the slew lock be engaged before travelling on the road.

Check on a daily basis that the boom lock fully engages and secures the boom. If the lock does not fully engage (or disengage) the boom stop **A** may need adjusting (consult your JCB Distributor).

⚠ WARNING

You or others can be killed or seriously injured if you operate the control levers from outside the cab. Operate the control levers only when you are correctly seated inside the cab.

INT-2-1-3

It is recommended that the slew lock be engaged before fitting the boom lock.

Note: The illustration shows a centremount boom and slew lock arrangement. Sideshift machines stow the slew lock in a bracket which is mounted on the kingpost casting.

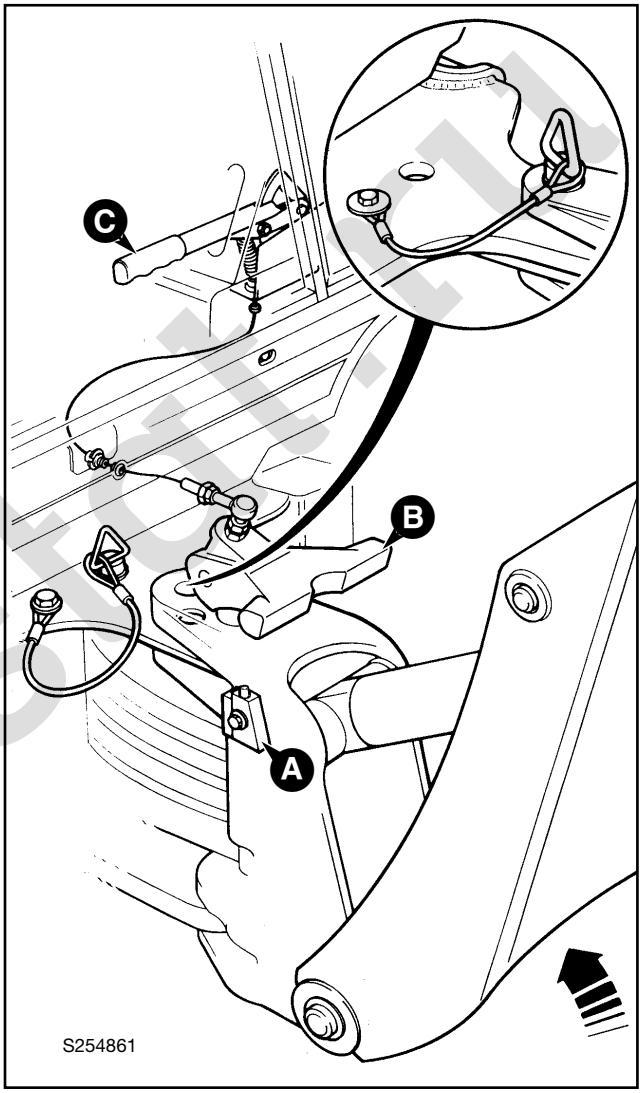

Engage the Boom Lock

1 Make sure that the boom lock **B** is fully raised, if necessary lift control lever **C** to raise the lock.

2 Close the boom ram (raise the boom).

3 Lower control lever **C** to lower the boom lock **B**, make sure that the lock is fully engaged in the boom lugs.

4 Lower the boom a little to tighten the lock.

Disengage the Boom Lock

1 Raise the boom a little to release the lock.

2 Lift control lever **C** to raise the boom lock **B**.

BOOM AND SLEW LOCKS (continued)

Slew Lock

We recommend that the boom lock and the slew lock be engaged before travelling on the road.

⚠ WARNING

You or others can be killed or seriously injured if you operate the control levers from outside the cab. Operate the control levers only when you are correctly seated inside the cab.
INT-2-1-3

⚠ WARNING

If two people are doing this job, make sure that the person working the controls is a competent operator. If the wrong control lever is moved or the controls are moved violently, the other person could be killed or injured.
2-2-6-5

It is recommended that the slew lock be engaged before fitting the boom lock.

Note: The illustration shows a centremount boom and slew lock arrangement. Sideshift machines stow the slew lock in a bracket which is mounted on the kingpost casting.

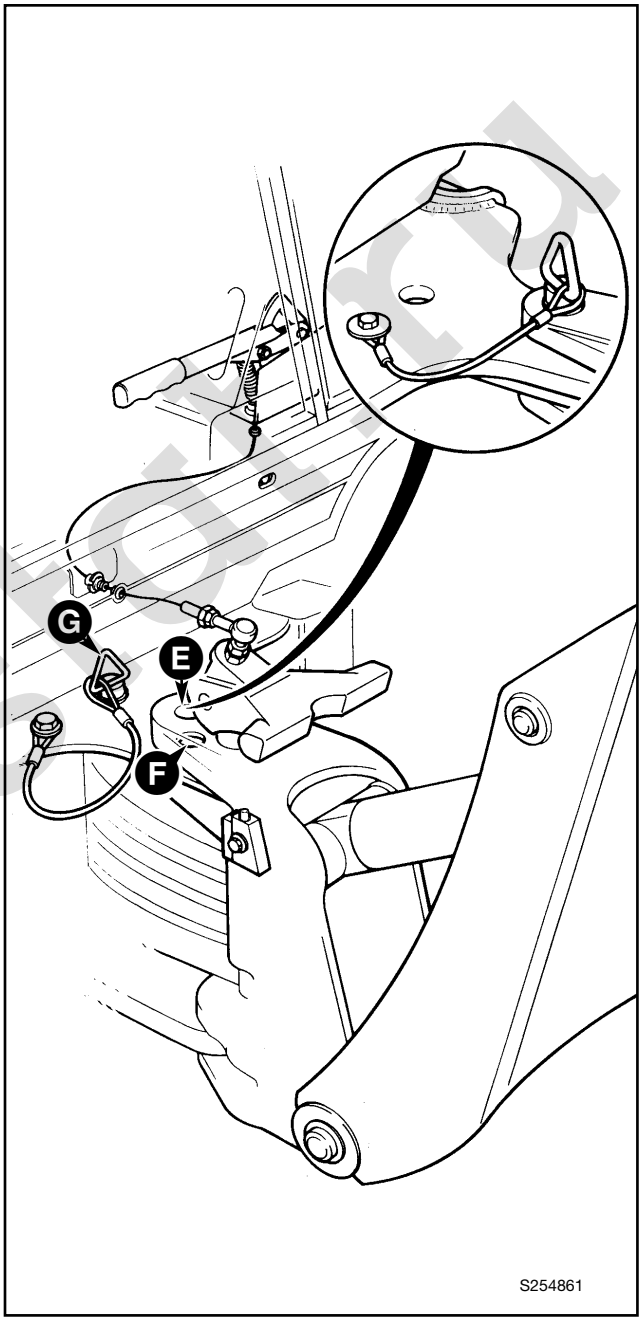

Engage the Slew Lock

1 Slew the backhoe into the required position. Make sure that hole **E** (in the kingpost) aligns with hole **F** (in the mainframe). Stop the engine.

⚠ WARNING

Do not attempt to install or remove the slew lock pin whilst sitting in the cab, you will be leaning over the backhoe control levers. You or others can be killed or seriously injured if the control levers are accidentally operated.
2-2-3-10

2 Remove the slew lock pin **G** from its stowage position and fit it into the aligned holes.

Disengage the Slew Lock

1 Stop the engine.

2 Remove the lock pin **G** and put it in its stowage position.

BEFORE STARTING THE ENGINE

1 Engage the Parking brake
The parking brake should have been engaged when the machine was last parked. But if it is not already engaged, engage it now.

⚠ DANGER

Before lowering the attachments to the ground, make sure that the machine and the area around it are clear of other people. Anyone on or close to the machine could fall and be crushed by the attachments, or get caught in the linkages.
2-2-3-4

2 Lower the Attachments to the Ground
Ensure that both the loader and the backhoe are on the ground, or the backhoe is in its transport position.

3 Do a Pre-start Inspection
For your own safety (and others) and for a maximum service life of your machine, do a pre-start inspection before starting the engine.

a If you haven't already done it, do a walkround inspection of the outside of the machine.

b Remove dirt and rubbish from the cab interior, specially around the pedals and control levers.

⚠ WARNING

Keep the machine controls clean and dry. Your hands and feet could slide off slippery controls. If that happens you will lose control of the machine.
2-2-3-6

c Remove oil, grease and mud from the pedals, control levers and the steering wheel.

d Make sure that your hands and shoes are clean and dry.

⚠ WARNING

Loose articles can fall and strike you or roll on the floor. You could be knocked unconscious, or the controls could get jammed. If that happens you will lose control of the machine.
2-2-3-7/1

e Remove or secure all loose articles in the cab - such as lunch boxes, tools etc.

f Inspect the ROPS/FOPS structure for damage. Get your JCB Distributor to repair any damage. Make sure all its securing bolts are fitted and correctly tightened.

g Check around the cab for loose or missing bolts, screws etc. Replace or tighten where necessary.

h Inspect the seat belt and its mountings for damage and excessive wear.

⚠ WARNING

When a seat belt is fitted to your machine replace it with a new one if it is damaged, if the fabric is worn, or if the machine has been in an accident. Fit a new seat belt every three years.
2-3-1-7/1

i Check that the following are in working order :-

Lights, Warning Lights, Horn, Indicator Lights, All Switches, Direction Indicators, Hazard Warning Lights, Windscreen Washer and Wipers (if fitted).

4 Adjust the Seat
Adjust the seat so that you can comfortably reach all the driving controls. You should be able to apply full brake pedal travel with your back against the seat back.

5 Set the Rear View Mirror(s)
Set the rear view mirror(s) to give you a good view close behind the machine when you are correctly seated.

6 Fasten the Seat Belt

Note: If the detachable cab roof section **A** has been removed (for transportation in a cargo hold for example) it must be refitted as soon as the machine has been unloaded. Failure to refit the roof section will invalidate the ROPS/FOPS certification. See ***ROPS/FOPS Structure*** *(MAINTENANCE section).*

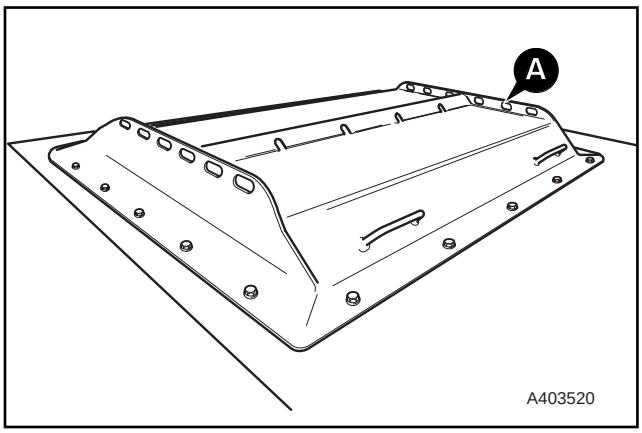

STARTING THE ENGINE

1 Read and comply with ***Before Starting the Engine*** on the previous page.

2 **Put the Forward/Reverse Lever in Neutral**
The engine will not start unless the forward/reverse lever **A** is in neutral.

3 **Set the Hand Throttle Lever to Minimum**
Make sure that hand throttle lever **C** is set at the minimum engine revs position.

4 **Start the Engine**

⚠ WARNING

Breathing the machine exhaust gases can harm and possibly kill you. Do not operate the machine in closed spaces without making sure there is good ventilation. If possible, fit an exhaust extension. If you begin to feel drowsy, stop the machine at once. Get out of the cab into fresh air.
INT-2-1-10

Note: If the outside temperature is low, 0 °C (32 °F) or below, turn the starter switch key to the 'heat' position for 15-20 seconds to warm the engine induction manifold.

- **a** Slightly depress the accelerator pedal **D**.
- **b** Turn the starter switch **E** to the 'start' position and hold it there until the engine starts.

Note: If the engine has not started after 20 seconds, release the starter switch. Wait two minutes before attempting another start. This will allow the starter motor to cool down.

- **c** Release the starter key as soon as the engine starts. The switch will return to 'IGN' position.
- **d** Ease off on the accelerator pedal to reduce engine speed.

5 **Check the Warning Lights**
Once the engine has started, check that all the warning lights have gone off. Do not race the engine until the **oil pressure low** light has gone out. Racing the engine too soon could damage the turbo-charger due to under lubrication. Check that the audible alarm is silent.

Note: If any warning lights fail to go off, or come on while the engine is running, stop the engine as soon as it is safe to do so.

6 **Warm Up the Hydraulics.**
Operate the backhoe a few times to help warm up the hydraulic system.

Note: New engines DO NOT require a running-in period. The engine/machine should be used in a normal work cycle immediately; glazing of the piston cylinder bores resulting in excessive oil consumption, could occur if the engine is gently run-in. Under no circumstances should the engine be allowed to idle for extended periods; (e.g. warming up without load).

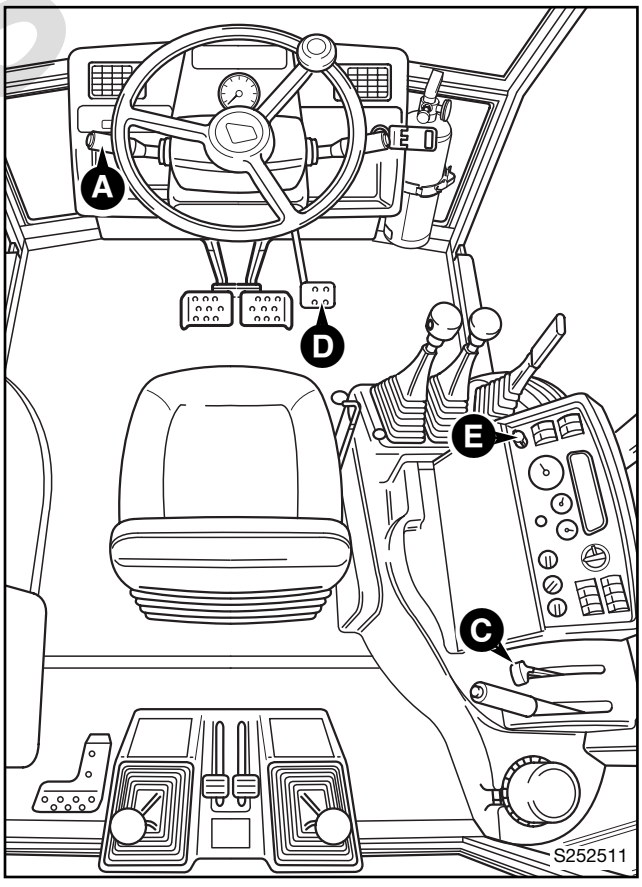

INTER-VEHICLE START CONNECTOR

⚠ WARNING

If you try to charge a frozen battery or jump-start and run the engine, the battery could explode.

Do not use a battery if its electrolyte is frozen. To prevent the battery electrolyte from freezing, keep the battery at full charge.

Batteries give off a flammable gas that can explode.

Do not smoke when checking the electrolyte levels. When starting from another machine, make sure the two vehicles do not touch each other. This prevents any chance of sparks near the battery. Sparks could ignite the battery gas. If that happens the battery could explode.

Even with the starter switch set to off some circuits will be energised when the external power supply is connected. Set all machine switches to their OFF positions before connecting the external power supply.

Do not connect a booster supply directly across the starter motor. Doing this by-passes the neutral safety switch and the engine can start with the transmission in gear.

Use only booster cables which are in good condition with securely attached connectors. Connect both ends of one booster cable before connecting the other one.
5-2-2-3

This Backhoe is a 24 volt machine.

1 The parking brake should have been engaged when the machine was last parked. If it is not engaged, engage it now.

2 Set all switches in the cab to off.

⚠ DANGER

Before lowering the attachments to the ground, make sure that the machine and the area around it are clear of other people. Anyone on or close to the machine could fall and be crushed by the attachments, or get caught in the linkages.
2-2-3-4

3 Lower the loader shovel to the ground, if it is not already there. It will lower itself under its own weight when you operate the lever. Operate the lever carefully to control the rate of descent. If your machine is fitted with hose burst protection valves you will not be able to lower the shovel. In this case install the safety strut.

4 Connect the inter vehicle cable to connector **A** and the other end to the booster supply.

5 Do the pre-start checks, *see* ***Before Starting the Engine***.

6 Start the engine, see ***Starting the Engine*** *(OPERATION section).*

7 Disconnect the inter vehicle cable from the booster supply and connector **A**, fit the cover.

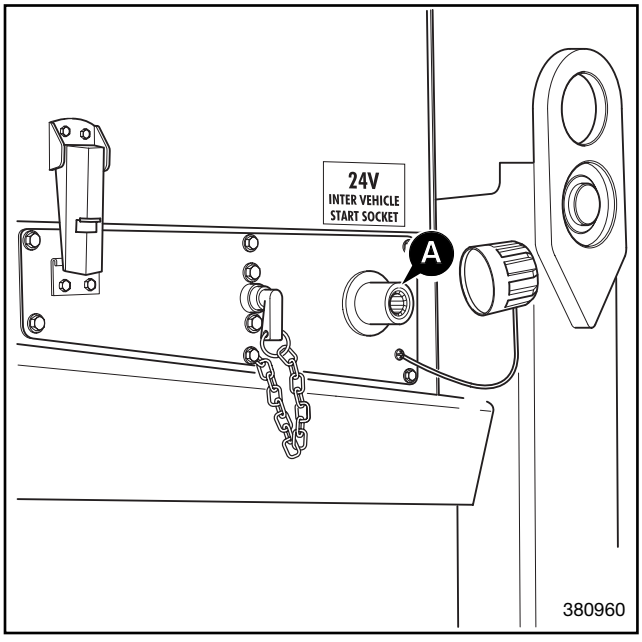

PREPARING THE MACHINE FOR TRAVEL

When travelling on the road or on site there are usually local rules and safety regulations for the machine travelling position. The '**Road Travelling Position**' and '**Site Travelling Position**' described on the following pages are recommendations that should help you meet the requirements of these regulations; they are not necessarily the applied law:

PLEASE MAKE SURE THAT BEFORE TRAVELLING ON THE ROAD OR ON SITE, YOU AND YOUR MACHINE COMPLY WITH ALL THE RELEVANT LOCAL LAWS - IT IS YOUR RESPONSIBILITY.

Whether driving on the road or on site, there are two possible travelling positions:

1 The 'tucked-in' position, i.e. the backhoe is placed across the back of the machine, as shown at **A**.
2 The 'central protruding' position, i.e. the backhoe is placed central and protruding from the back of the machine, as shown at **B**.

Choosing the correct travelling position will depend on; the type of machine you are operating and the type of equipment you have fitted to the backhoe.

Convoy Light

To use the convoy light the machine must be in the 'tucked-in' position as shown at **A**. Attach the convoy light to the boom as shown at **C**. The light is held in place magnetically. When not in use stow the light assembly on the battery box as shown at **D**. Be sure to coil and stow the electrical wires out of harms way.

Backhoe Attachments

We recommend that all backhoe attachments be removed before travelling on the road. However, if the machine IS driven on the road with attachments fitted, then the conditions listed under the headings ***Tucked-In Travel Position*** and ***Central Protruding Travel Position*** should be maintained.

Tucked-In Travel Position

1 The attachments must not cause the maximum overall machine width to exceed 2.5m (8.2ft). If any part protrudes beyond the outer edge of the rear frame, it must be marked with red and white stripes to warn that a hazard exists.
2 The boom lock and slew lock must be securely fitted.
3 In certain territories, it will be necessary to fit a bucket crowd ram safety strut.
4 The attachments must not protrude from the back of the machine by more than 1m (3.28ft). If the attachments do protrude by more than 1m (3.28ft) then a rear protrusion plate/light must be fitted. If the attachment is removed, then the tipping link must be secured.
5 Machine stability must be maintained.
6 The rear stop/tail/indicator lights (both sides) must be clearly visible from the rear of the machine.
7 The hydraulic clamps (hydraclamps) must be engaged.

Central Protruding Travel Position

1 The attachments must not affect machine stability. For instance there must be at least 20% of the total machine weight acting on the front axle.
2 The backhoe must be set centrally on the rear frame and hydraulic clamping engaged (applicable to sideshift machines only).
3 The boom lock and slew lock must be securely fitted.
4 In certain territories, it will be necessary to fit a bucket crowd ram safety strut.
5 A protrusion plate/light must be fitted. If the attachment is removed, then the tipping link must be secured and the rear protrusion plate/light must still be fitted.

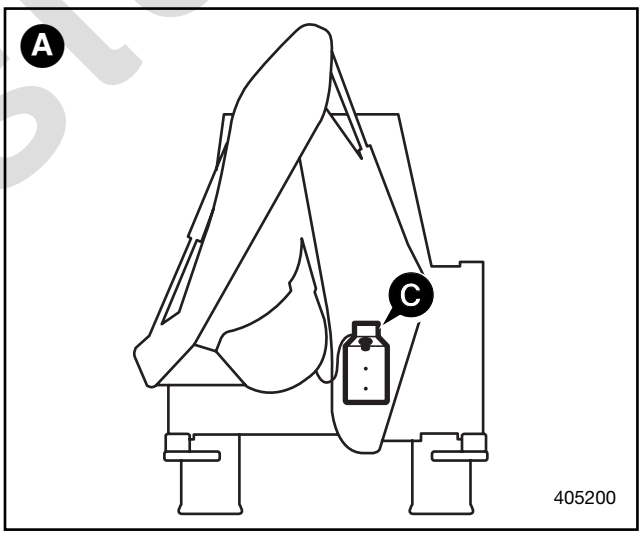

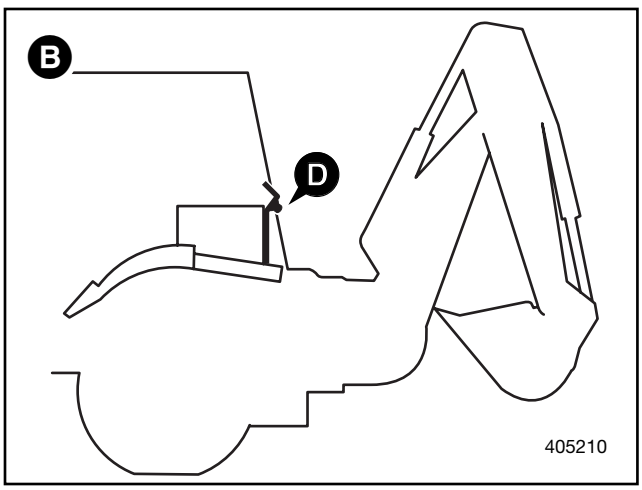

PREPARING THE MACHINE FOR TRAVEL (continued)

Road Travelling Position

Read and understand the information given on page 40. The recommendations given below ARE NOT necessarily the applied law, please make sure you are complying with the relevant local laws.

Note: If the machine is to be used outside the UK and travelling on the opposite side of the road the headlight lens must be changed and the convoy light and number plate and light must be swapped over.

1 Secure ancillary equipment, see Installing Ancillary Equipment In Preparation For Road Travel, in **OPTIONAL ATTACHMENTS** section.

2 If Required Select Smooth Ride System to On

⚠ CAUTION

Do not use the Smooth Ride System with the travel struts fitted as the struts or hydraulic cylinder may be damaged.
0046

⚠ CAUTION

When the Smooth Ride System is selected ON the loader arms may lift or lower slightly, make sure personnel are clear.
2-2-5-10

Use of the Smooth Ride System during loader operation not requiring power down of the loader arms will enhance machine operation by smoothing the ride across uneven surfaces.

Raise the front loader shovel 600 mm (2ft), press switch **A** which will illuminate when the system is ON.

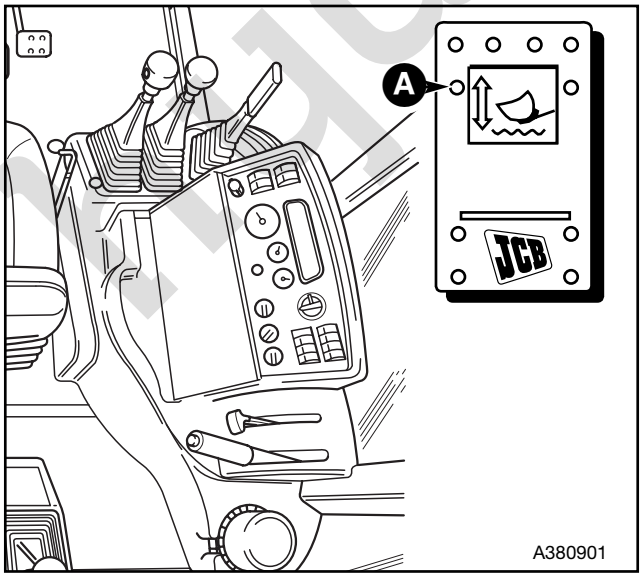

3 Fit the travel struts **B** if the Smooth Ride System not required and is switched Off.

⚠ CAUTION

Do not use the Smooth Ride System with the travel struts fitted as the struts or hydraulic cylinder may be damaged.
0046

4 Engage the boom and slew locks.

5 If the backhoe is set central to the rear frame, attach a protrusion plate/light to the dipper. Ensure that the plate light is plugged in.

6 If any attachments are fitted, make them safe, for example, fit tooth guards etc. If forks are fitted, put them in the fork stowage position.

Note: In certain territories you will be breaking the law if you do not fit a tooth guard to the loader shovel. Make sure you are complying with local laws.

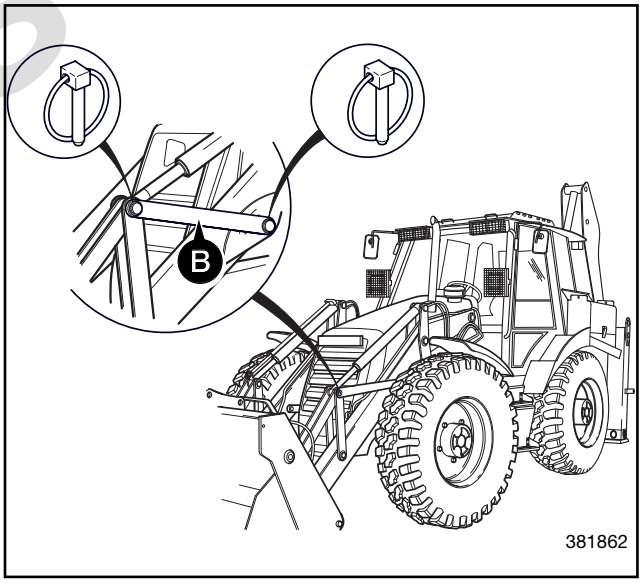

PREPARING THE MACHINE FOR TRAVEL (continued)

Road Travelling Position (cont'd)

7 The stop lights should come on when the brakes are applied.

8 Make sure the stabilisers are fully up and locked.

9 Fit the loader and backhoe lever locks.

10 Fit the Flashing Beacon:

In some territories, to meet legislative requirements, a beacon extension mount must be fitted, or the beacon must be mounted on the dipper. Consult your JCB Distributor for advice.

a Fit the beacon to the cab roof and plug the lead into the cab roof socket, the beacon will start flashing when switch **C** is pressed on.

b DO NOT climb on the machine to fit the beacon on the dipper. Fully extend and lower the boom and dipper so that it is possible to fit the beacon whilst standing on the ground.

Note: We recommend that a flashing beacon is fitted if the machine is travelling on public highways. In certain territories you will be breaking the law if you do not fit a flashing beacon when travelling on public highways - make sure you are complying with local laws.

11 Check that the road lamps, including the flashing beacon, are all in working order and clearly visible. Do not drive the machine unless both stop lights work correctly.

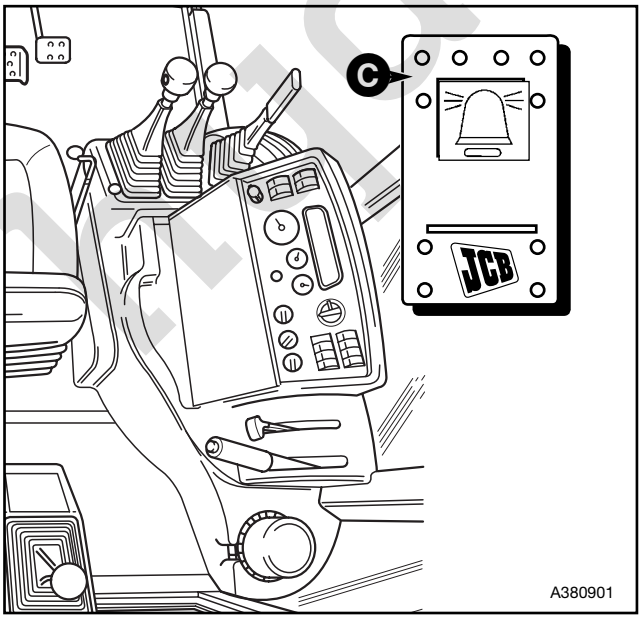

8642 - 1

PREPARING THE MACHINE FOR TRAVEL (continued)

Site Travelling Position

Read and understand the information given on page 40. The recommendations given below ARE NOT necessarily the applied law, please make sure you are complying with the relevant local laws.

1 If Required Select Smooth Ride System to On

⚠ CAUTION

Do not use the Smooth Ride System with the travel struts fitted as the struts or hydraulic cylinder may be damaged.
0046

⚠ CAUTION

When the Smooth Ride System is selected ON the loader arms may lift or lower slightly, make sure personnel are clear.
2-2-5-10

Use of the Smooth Ride System during loader operation not requiring power down of the loader arms will enhance machine operation by smoothing the ride across uneven surfaces.

If Smooth Ride System is fitted and selected ON the loader can not power down. For duties other than light handling the system should be selected OFF.

Raise the front loader shovel 600 mm (2ft), press switch **A** which will illuminate when the system is ON.

2 Fit the travel struts **B** if the Smooth Ride System not required and is switched Off.

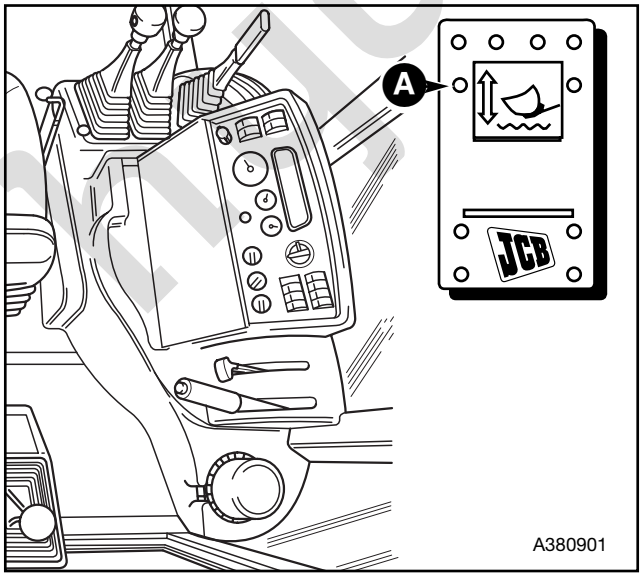

⚠ CAUTION

Do not use the Smooth Ride System with the travel struts fitted as the struts or hydraulic cylinder may be damaged.
0046

3 Set the backhoe, there are two possible positions, see page 40.

4 If any attachments are fitted, make them safe. Unless you are using the forks to carry a load, put the forks in the stowage position.

5 Engage the boom and slew locks.

6 Make sure the stabilisers are fully up.

7 Select the drive/brake mode most suitable for the terrain and the work you are doing.

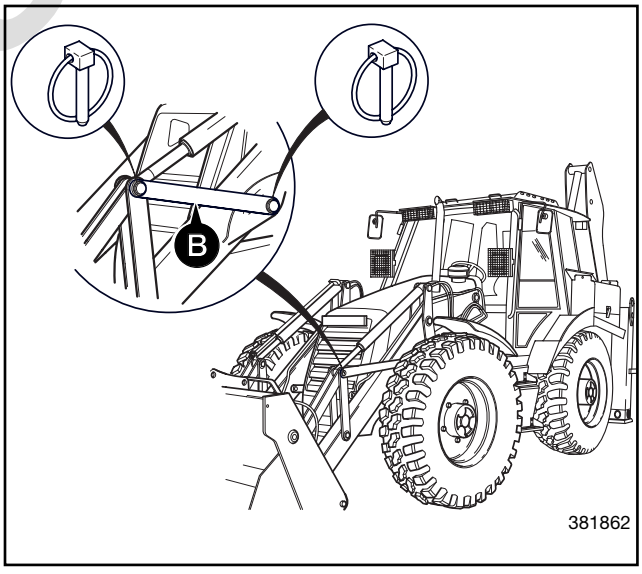

TESTING THE PARKING BRAKE

SAFETY NOTICE: Ensure all routine health and safety precautions are observed before operating machines.

⚠ WARNING

Before testing the parking brake make sure the area around the machine is clear of people.
2-2-4-5

1 Enter the machine. Fasten your seat belt and park the machine on a level dry surface.

2 Fully apply the parking brake **1**.

3 On machines with two brake pedals ensure they are locked together.

4 Start the engine and raise the attachments to the appropriate travelling position.

5 Select fourth gear **3**.

6 Push down hard on foot brake pedals **4**.

7 Select forward drive **5**.

⚠ WARNING

If the machine starts to move during the following test, immediately apply the foot brakes and reduce the engine speed.
2-2-5-1

Test the parking brake as follows:

8 Move the parking brake lever fractionally forward until the warning light **6** is just extinguished.

9 Slowly release the foot brake pedal **4**.

10 If the machine has not moved, use the accelerator pedal to gradually increase the engine speed to 1500 RPM. The machine should not move.

11 Do not do this test for longer than 20 seconds.

12 Reduce the engine speed to idle and select neutral **5**.

13 Return the park brake lever **1** to the fully on position from its partially applied position.

14 Lower attachments and stop the engine.

15 If the machine moved during this test, adjust the parking brake and repeat the test. See **Parking Brake Adjustment** (MAINTENANCE Section).

If you have any queries concerning this test procedure or parking brake adjustment, consult your local JCB distributor.

⚠ WARNING

Do not use a machine with a faulty parking brake.
3-2-3-10

⚠ CAUTION

Non approved modifications to axle ratios, machine weight or wheel and tyre sizes may adversely affect the performance of the parking brake.
3-2-3-11

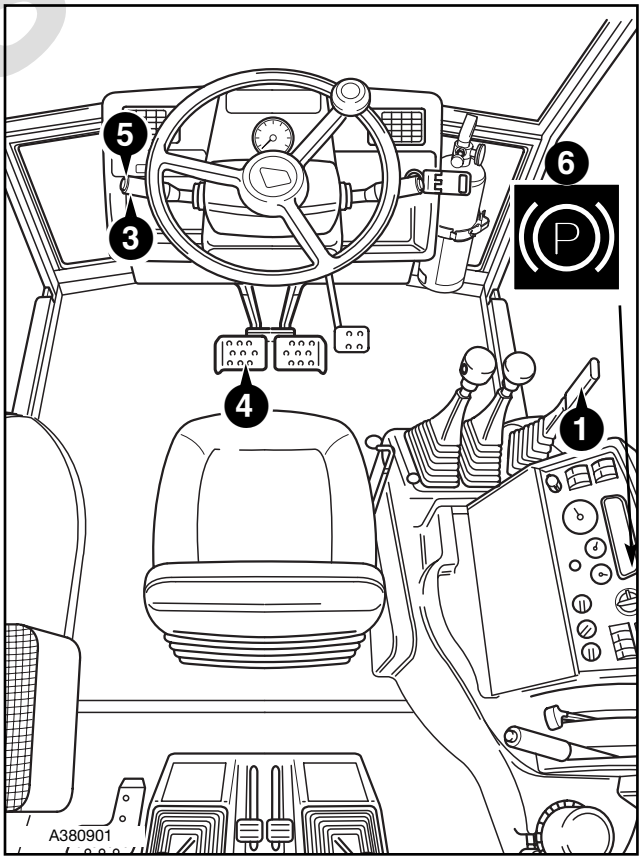

GETTING THE MACHINE MOVING

Operating Hints

The machine can be put in motion in any gear. But do not overwork the engine unnecessarily by using too high a gear for example, on a hill. Operating in too high a gear will overheat the torque converter fluid.

When moving the machine, keep it under control at all times. Stay alert for obstructions and possible hazards.

Do not use the brake pedals as footrests.

Do not coast the machine in neutral, you will not have full control. Also, coasting the machine will damage the transmission.

Select the necessary gear **before** starting down a slope. Use the same gear you would use to go up the slope. Do not change gear on the slope. If operating a machine with autoshift transmission, **select low gears in manual mode before** starting down a steep slope.

If the load will be pushing the machine on a downslope, select first gear (1) before starting downhill.

Use the brake pedal to prevent overspeeding down a slope.

Approach deep mud in first gear (1) with the front wheels straight.

The front and rear axles are fitted with axle breathers. If the machine is to be driven into deep water (i.e. above the level of the breather), care should be taken to ensure that water does not enter the breather.

UNDER NO CIRCUMSTANCES must the rear axle breather be blanked off, as this could cause a reduction in brake efficiency.

After you have warmed up the engine and tested the parking brake, move off as described below.

1 **Check Your Seat Belt and Seat**
Make sure that your seat belt is correctly fastened. Make sure that the seat is correctly adjusted.

2 **Select 2- or 4-Wheel Drive**
Select with rotary rocker switch **G**.

Note: Do not use 4-wheel drive on the road or hard surfaces, as it will cause excessive tyre wear and fuel consumption.

3 **Select steer mode**

This is a three-position rotary switch **H**, equipped with a hinged lockplate. The lockplate enables the selector switch to be locked into the 2-wheel steer mode, when the machine is driven on public roads.

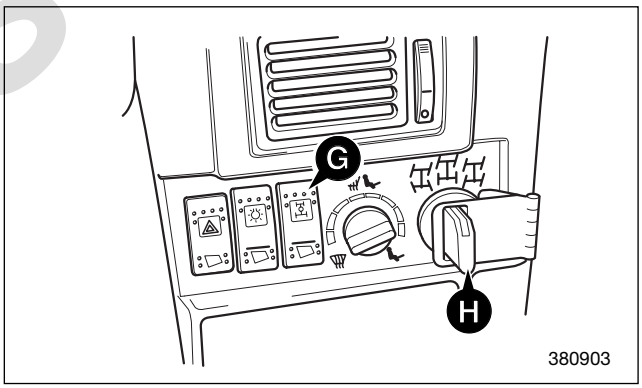

GETTING THE MACHINE MOVING (continued)

4 Engage a Gear
Select the required gear using gear select switch **E**.

⚠ WARNING

Do not change from top gear (4th) to bottom gear (1st) in one sudden movement whilst the machine is moving. Otherwise the machine will come to a sudden stop, you or others could be killed or seriously injured. When selecting lower gears, allow the engine speed to drop before each gear change.
2-1-1-9

5 Select Forward/Reverse and Move Off

⚠ WARNING

You and others could be killed or injured if you operate the forward/reverse lever while travelling. The machine will immediately reverse direction without warning to others. Follow the recommended procedure for proper use of this selector.
2-2-2-4

a Check that the attachments are in one of their travel positions.

b Push the brake pedal(s) **D** hard down.

⚠ WARNING

Reversing at high speeds can cause accidents. Do not reverse in third or fourth (if fitted) gear with full throttle. Always drive at a safe speed to suit working conditions.
INT-2-2-9

c Lift the forward/reverse lever **E** from its detent position and select forward or reverse.

Note: When forward or reverse drive is selected, an audible alarm will sound and a warning light will show to remind you that the parking brake is still engaged.

d Release the parking brake **F**.

⚠ WARNING

When driving the machine, use only the accelerator pedal to control the engine speed. Do not use the hand throttle lever to set the engine speed while driving.
2-2-2-2

e Make sure it is safe to move off, then release the brake pedals and push down on the accelerator pedal. The machine will move smoothly away.

⚠ WARNING

If the engine or steering fails, stop the machine as quickly as possible. Do not operate the machine until the fault has been corrected.
INT-2-1-5

f While the machine is travelling slowly, check the steering and brakes. Do not drive the machine unless the steering and brakes are working correctly. If you are not sure, assume they are faulty.

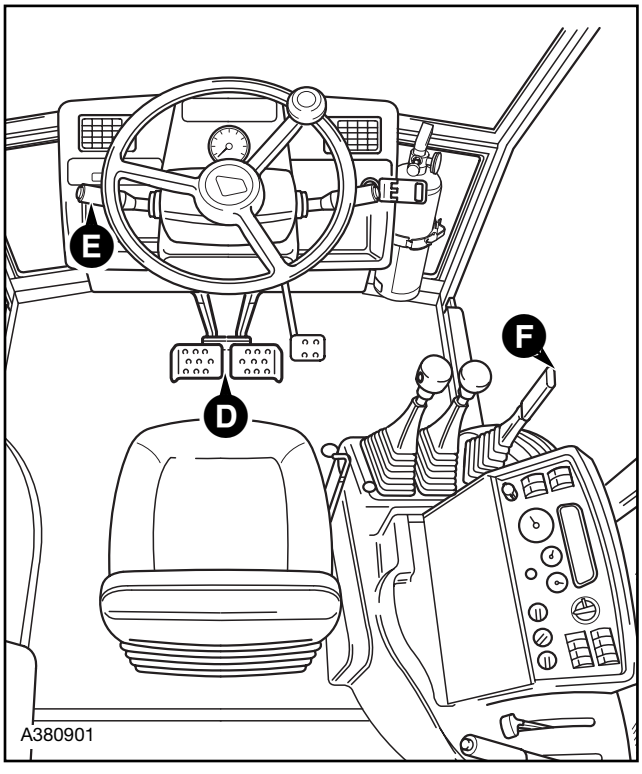

8642 - 1

STOPPING AND PARKING THE MACHINE

Stop the machine on dry and level ground where the machine will not be a hazard or danger. It is recommended that the backhoe is extended when parking, make sure there is enough room.

⚠ WARNING

An incorrectly parked machine can move without an operator. Follow the instructions in this handbook to park the machine correctly.
INT-2-2-4

1 Ease up on the accelerator pedal **A** and down on the brake pedals **B** to bring the machine to a smooth stop. Keep the foot brakes on until the parking brake has been pulled on, (Step 2).

⚠ CAUTION

The parking brake must not be used to slow the machine from travelling speed, except in an emergency, otherwise the efficiency of the brake will be reduced.

Whenever the parking brake has been used in an emergency, always renew both brake pads.
4-2-1-1/2

2 Pull the parking brake lever **C** fully up. Make sure that the parking brake indicator lights up. Release the foot brakes.

⚠ WARNING

Do not dismount a moving machine.
3-2-3-12

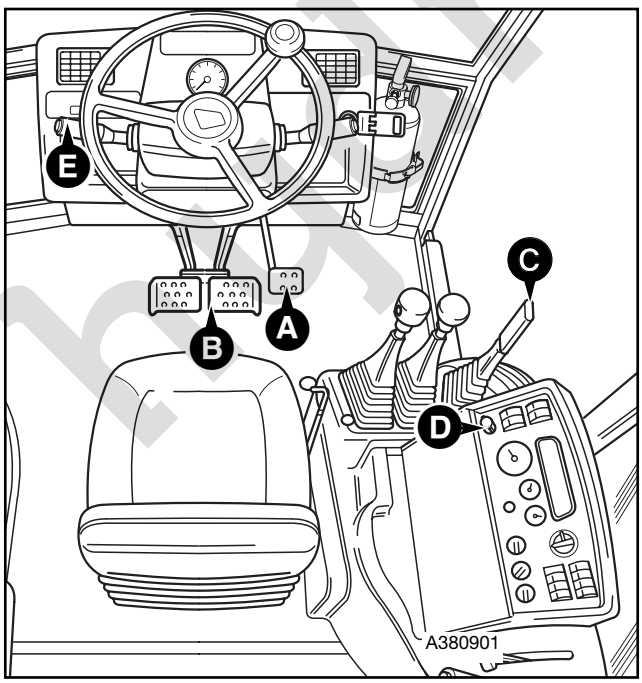

3 Set the forward/reverse lever **E** to neutral. Make sure the lever is in its detent position.

4 Unlock and lower the stabiliser legs until they just touch the ground.

⚠ DANGER

Before lowering the attachments to the ground, make sure that the machine and the area around it are clear of other people. Anyone on or close to the machine could fall and be crushed by the attachments, or get caught in the linkages.
2-2-3-4

5 Lower the loader arms and backhoe assembly to the ground. It is recommended that the backhoe is positioned as shown at **F** (bucket fully open, boom and dipper fully extended).

6 It is recommended that turbocharged engines are run at 1000 RPM (approximately) and reduced load for 2 - 3 minutes before shut down. This will allow the turbocharger to cool.

7 If you are leaving the machine, make sure that all switches are set to off. If necessary, leave the hazard warning and/or side lights switched on. Remove the starter key **D**.

8 Use the handholds and step when you climb down from the machine. If you are leaving the machine, close and latch all windows and lock both doors. Make sure that the filler cap is locked on.

⚠ WARNING

Always face the machine when entering (and leaving) the cab. Make sure your shoes and hands are clean and dry. Otherwise you could slip and fall.
2-2-1-3

9 At the end of a working cycle or if the machine is being left unattended, provided the lights are not required remove the battery isolator key (if fitted), see **Battery** (MAINTENANCE section).

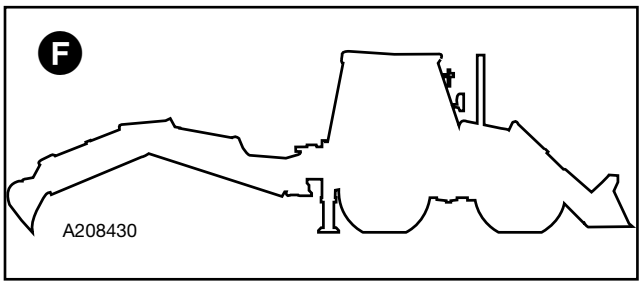

USING THE ATTACHMENTS AND SITE SAFETY

This section explains some techniques for efficient and safe use of the machine and its attachments. Attention is also drawn to the various safety aspects of operating on site. Read and understand this section before you start working with the machine. Practice using the attachments until you are completely familiar with the controls and what they do.

Before you start using the machine, tell your work mates what you will be doing and where you will be working. On a busy site, use a signalman.

Remember that your machine is mobile. Whenever possible, manoeuvre your machine into a position which combines safety with efficiency. If you have to choose, remember that:

SAFETY MUST COME FIRST

Choose the correct attachment for the job. Do not use an oversize bucket for rocky material. It could overload the system and shorten service life.

Safety Check List

⚠ WARNING

General Site Safety

Before you start using the machine, inspect the job site. You could be killed or injured if the ground gives way under your machine or if piled material collapses onto it. Check for potholes and hidden debris, logs, ironwork etc. Any of these could cause you to lose control of your machine.

2-2-5-2

⚠ CAUTION

Legal Liability

You and/or your company could be legally liable for any damage you may cause to public utilities. It is your responsibility to make sure that you know the locations of all public utility cables or pipes on the site which could be damaged by your machine.

2-2-5-3

⚠ WARNING

Water Supplies and Drains

Before you start using the machine, check with your local public water supplier if there are buried pipes and drains on the site. If there are, obtain a map of their locations and follow the advice given by the water supplier.

You are strongly advised to make sure that the safety arrangements on site comply with the local laws and regulations concerning work near buried water pipes and drains.

2-2-5-6

⚠ WARNING

Electrical Power Cables

You could be electrocuted or badly burned if you get the machine or its attachments too close to electrical power cables.

You are strongly advised to make sure that the safety arrangements on site comply with the local laws and regulations concerning work near electric power lines.

Buried Electric Power Cables

Before you start using the machine, check with your electricity supplier if there are any buried power cables on the site.

Overhead Electric Power Cables

There is a minimum clearance required for working beneath overhead power cables. You must obtain details from your local electricity supplier.

2-2-5-4

⚠ WARNING

Reworking Old Sites

There could be dangerous materials such as asbestos, poisonous chemicals or other harmful substances buried on the site. If you uncover any containers or you see any signs of toxic waste, stop the machine and advise the site manager immediately.

2-2-5-5

⚠ WARNING

Communications

Bad communications can cause accidents. If two or more people are working on the machine, make sure each is aware of what the others are doing. Before starting the engine make sure the others are clear of the danger areas; examples of danger areas are: the rotating blades and belt on the engine, the attachments and linkages, and anywhere beneath or behind the machine. People can be killed or injured if these precautions are not taken.

INT-3-1-5

⚠ WARNING

Safety Barriers

Unguarded machines in public places can be dangerous. In public places, or where your visibility is reduced, place barriers around the work area to keep people away.

INT-2-2-8

USING THE ATTACHMENTS AND SITE SAFETY (continued)

Safety Check List (Cont'd)

⚠ WARNING

Work Sites

Work sites can be hazardous. Inspect the site before working on it. Look for potholes, weak ground, hidden rocks etc. Check for utilities such as electric cables (overhead and underground), gas and water pipes etc. Mark the positions of the underground cables and pipes. Make sure that you have enough clearance beneath overhead cables and structures.

INT-2-2-1

⚠ WARNING

Underground Gas Pipes

Before you start using the machine, check with your local gas company if there are any buried gas pipes on the site.

If there are buried gas pipes we recommend that you ask the gas company for any specific advice regarding the way you should work on the site.

Some modern gas pipes cannot be detected by metal detectors, so it is essential that an accurate map of buried gas pipes is obtained before any excavation work commences.

Hand dig trial holes to obtain precise pipe locations. Any cast iron pipes found should be assumed to be gas pipes until contrary evidence is obtained.

Older gas pipes can be damaged by heavy vehicles driving over the ground above them.

LEAKING GAS IS HIGHLY EXPLOSIVE.

If a gas leak is suspected, contact the local gas company immediately and warn all personnel on the site. Ban smoking, ensure that all naked lights are extinguished and switch off any engines which may be running.

You are strongly advised to make sure that the safety arrangements on site comply with the local laws and regulations concerning work near buried gas pipes.

2-2-6-1/1

⚠ WARNING

Hillsides

Operating the machine on hillsides can be dangerous if proper precautions are not taken. Ground conditions can be changed by rain, snow, ice etc. Check the site carefully. Operate in first gear on hillsides, when applicable, keep all attachments low to the ground. Never coast down a hill with the engine off or the transmission in neutral.

INT-2-2-7

⚠ WARNING

Communications

Bad communications can cause accidents. Keep people around you informed of what you will be doing. If you will be working with other people, make sure any hand signals that may be used are understood by everybody. Work sites can be noisy, do not rely on spoken commands.

INT-2-2-3

⚠ WARNING

Practice

You or others can be killed or seriously injured if you do unfamiliar operations without first practising them. Practice away from the work site on a clear area. Keep other people away. Do not perform new operations until you are sure you can do them safely.

INT-2-1-1

⚠ WARNING

Banks and Trenches

Banked material and trenches can collapse. Do not work or drive too close to banks and trenches where there is danger of collapse.

INT-2-2-5

WORKING WITH THE LOADER

Operating Hints

To use the JCB Backhoe Loader efficiently and safely you must know the machine and have the skill to use it. This handbook instructs you on the machine, its controls and its safe operation. It is not a training manual on the art of loading. If you are a new operator, get yourself trained in the skills of using a JCB Backhoe Loader before trying to work with it. If you don't, you will not do your job well, and you will be a danger to yourself and others.

Remember that you will be driving the machine while you are using the loader. Keep alert for bystanders and possible hazards. Stay in the correct driving position. Keep your seat belt fastened.

When working with the loader, set the backhoe straight behind the machine, as for road travel.

Keep the loader shovel low to the ground when travelling. This increases your visibility and makes the machine more stable.

Whenever possible, travel in reverse when you are carrying a loaded shovel downhill. Travel forward when you are going uphill. With heavily loaded shovels, do not travel faster than 8 km/h (5 mph).

If Smooth Ride System is fitted and selected ON the loader can not power down. For duties other than light handling the system should be selected OFF.

Filling the Loader Shovel

⚠ WARNING

When loading with material from a high bank or pile, remove any overhang first. Watch out for sliding material. If overhanging material falls, you and your machine could be buried.
2-2-6-3

On hard surfaces, select **Float.** As the shovel enters the pile, start rolling the shovel back while raising it at the same time. This will sweep the shovel up the pile, gathering material as it goes.

When entering a stockpile, pressing the 'hydraulic speed control' switch will give more tractive force to the loader.

Pressing the transmission dump switch will give more power to the loader and speed the operation. Try to fill the shovel in one pass. Half full shovels are less productive.

When moving the load, roll the shovel right back to prevent spillage.

When you are loading from a pile of loose material, start at the bottom and follow up the face as shown. Approach the pile with the shovel level and skimming the ground.

In tightly packed material, start at the top and work down.

When removing material from a stockpile, start at a shovel's height from the base. Once the height of the stockpile has been reduced, begin loading from the base.

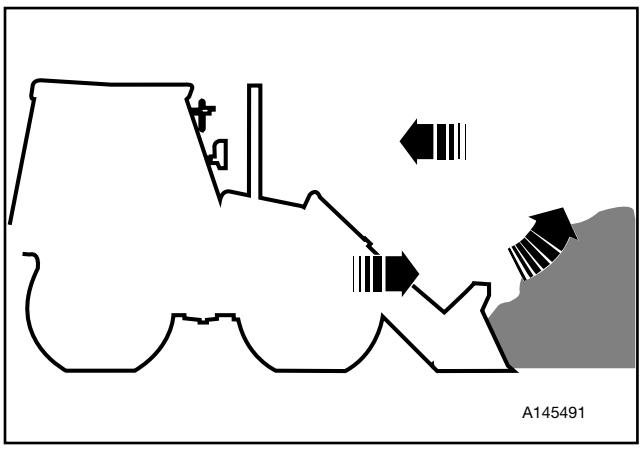

8642 - 1

WORKING WITH THE LOADER (continued)

Loading a Truck

Put the truck(s) at an angle of about 45° to the pile, as shown. This cuts out unnecessary manoeuvring. Allow enough distance for the shovel to reach its unloading height while you are travelling, without slowing down.

Keep the wind on your back. This keeps dust away from you and your machine.

Move your machine as close as possible to the truck before unloading.

If the truck body is about as long as a shovel's width, tip the load into the centre of the truck. If the truck is two shovel-widths long or more, load the front of the truck first.

Do not dump the material in one sudden movement. Roll the shovel forward in stages until it is empty. Use the control lever to rock the shovel back and forth to loosen any sticky material.

Getting the Machine Unstuck

If the machine gets stuck in the trench, use the shovel to free it: set the drive in neutral, then roll the shovel forward as shown.

Then select shovel **Lower** to raise the front wheels. When the front wheels are free, slowly roll the shovel back, to push the machine backwards. When the front wheels are on firm ground, select reverse and drive clear.

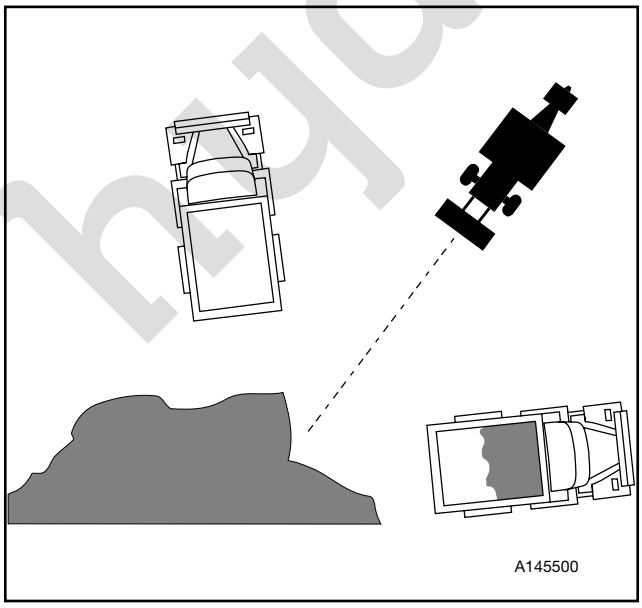

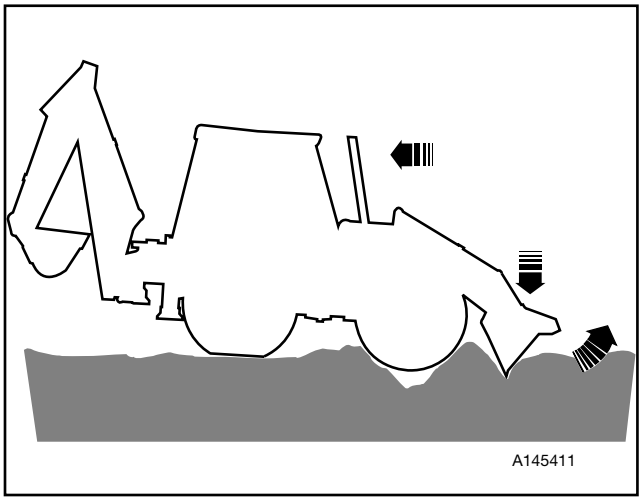

WORKING WITH THE BACKHOE

Operating Hints

⚠ WARNING

Before you start using the backhoe, you must convert the machine into a safe and stable working platform. See Preparing to Use the Backhoe in OPERATION section for details.
2-2-6-4/1

To use the JCB Backhoe Loader efficiently and safely you must know the machine and have the skill to use it. This handbook instructs you on the machine, its controls and its safe operation. It is not a training manual on the art of excavating. If you are a new operator, get yourself trained in the skills of using a JCB Backhoe Loader before trying to work with it. If you don't, you will not do your job well, and you will be a danger to yourself and others.

If you will be working with a labourer, make sure you both understand what each other will be doing. Learn and use the recognised signalling procedures. Do not rely on shouting - ***he will not hear you***.

Make sure the correct bucket for the job is fitted. Instructions for removing and installing buckets are given on the following pages.

For the best fuel economy when using the backhoe, keep the tachometer pointer in the green band **A**.

Convoy Light

Before using the backhoe be sure to detach and stow the convoy light (if applicable). See ***Preparing the Machine for Travel***.

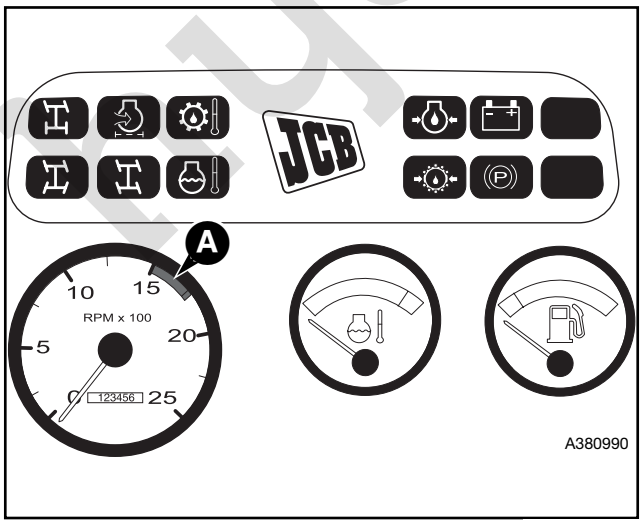

Preparing to Use the Backhoe

When choosing a digging position, avoid digging downhill if possible. Whenever possible, dump the load on the uphill side of the excavation. Both these precautions will help to keep the machine stable.

1 When the machine is in the desired position on the site, roll the shovel forward, then lower it to take the weight off the front tyres.

If Smooth Ride System is fitted, switch OFF the system then lower the shovel in order to take the weight off the front tyres.

⚠ WARNING

The machine will drop suddenly if the Smooth Ride System is selected ON when the machine is supported on the loader shovel.
2-2-6-9

Note: On tarmac surfaces, do not roll the shovel fully forward. Keep the bottom of the shovel flat on the ground. This will minimise damage to the surface. When a Clamshovel is fitted, do not put weight on the fork carriers.

2 Set the forward/reverse lever to neutral. Make sure the lever is in its detent position.

3 Engage the parking brake.

4 Turn the seat to face the backhoe. Make sure the seat locks in position. Then lower the stabilisers to raise the rear tyres just clear of the ground. Remove travel pins before lowering the stabilisers. Adjust the stabiliser positions until the machine is level, shown at **B**. In soft ground, put heavy duty planks beneath the stabilisers. This will spread the weight and prevent sinking.

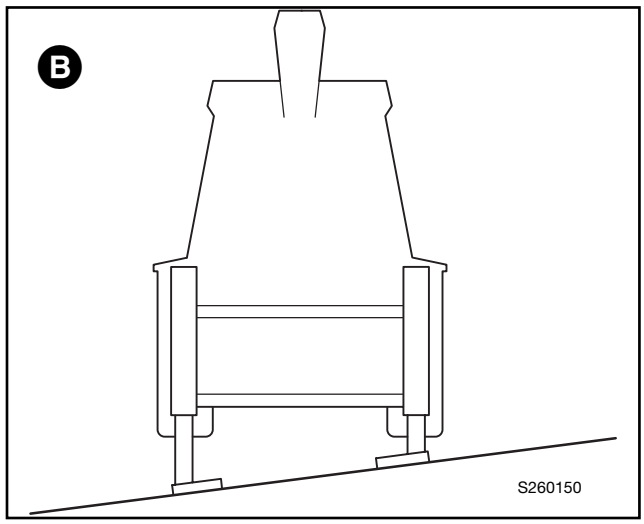

WORKING WITH THE BACKHOE (continued)

Digging

Note: The illustration shows a typical JCB Backhoe Loader. It may not look exactly like your machine.

To start the dig, reach out with the boom and dipper and position the bucket as shown at **A**.

Slowly close the bucket and at the same time bring the dipper in. Make sure the bucket stays at the same angle to the ground while it travels. If necessary, at the same time apply a downward pressure on the boom, to increase the digging force on the bucket.

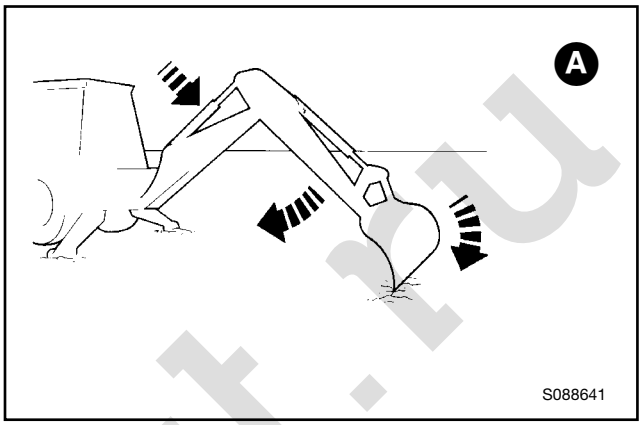

When the bucket is full, close it fully and at the same time move the dipper out a little way, shown at **B**. This will keep soil from building up under the machine.

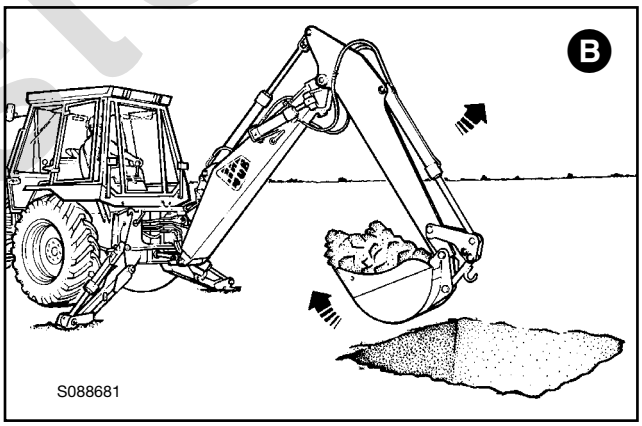

Swing the bucket towards the dump area, shown at **C**. Start dumping as the bucket approaches the pile. Do not waste time by dumping too far from the excavation. Dump close to the start dig position. Swing the bucket back to the excavation and start the next dig.

Note: Do not use the side of the excavation to stop the bucket. This could damage the machine.

Backfill the excavation by loading the bucket with soil from the pile. Do not push the soil with the side of the bucket.

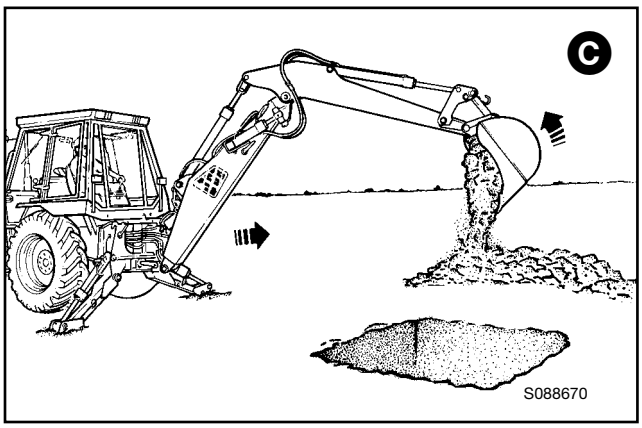

WORKING WITH THE BACKHOE (continued)

Sideshifting the Backhoe

Note: Before sideshifting the backhoe, make sure that the kingpost rails are clear of debris.

1 Use the stabilisers to set the machine level and stable, with the kingpost **A** vertical.

2 Rest the bucket on the ground, straight behind the machine.

3 Release the clamps, press the rocker switch **B** to the 'ON' position, the switch light should be illuminated.

4 Loosen the kingpost on its rails, operate the boom up and down a few times.

5 Raise and slew the backhoe directly to one side of the machine as shown at **C**. Slew to the left if you want to sideshift to the right. Slew to the right if you want to sideshift to the left. Set the bucket on the ground, with the dipper at 90° to the boom as shown.

6 Open the bucket. As the bucket opens, the kingpost will be pushed across the back of the machine. If the kingpost **A** sticks in mid-travel, raise or lower the boom slightly to keep the kingpost vertical to the rails.

7 Once the kingpost has been sideshifted to the required position, raise and slew the backhoe around so that it is straight behind the machine before applying the clamps. Failure to do so may cause the kingpost to be clamped whilst at a slight angle instead of vertical.

8 Apply the clamps by pressing rocker switch **B** to the 'OFF' position.

Note: Pressure generated in the backhoe services will ensure the clamps fully engage. Before operating the backhoe, move the bucket control lever to fully crowd the bucket, hold the lever in this position for a minimum of five seconds (engine at 1500 r.p.m.).

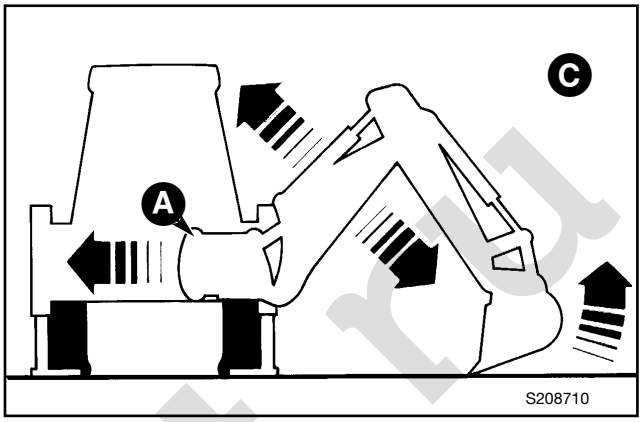

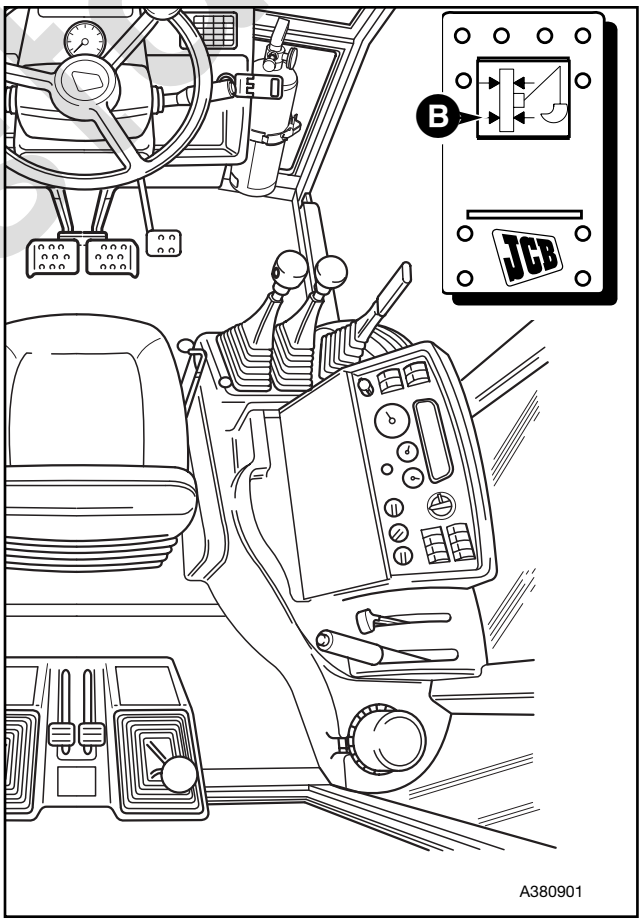

WORKING WITH THE BACKHOE (continued)

Lifting with the Backhoe

The owner and/or operator must make sure that he fully understands the laws and regulations concerning the use of the JCB Backhoe Loader as an earthmover and as a crane. Consult your JCB distributor for further information.

If your machine has not been fitted with an approved lifting point such as a hook or shackle **A** then it must not be used as a crane. Use the machine for earthmoving purposes only.

Your machine may be used as a crane if it has been fitted with an approved lifting point such as a hook or shackle, if it has been tested, plated and certified for its safe working load, and if all other regulation requirements have been met (consult your JCB distributor).

⚠ WARNING

Before lifting a load with the backhoe, read the following:

A bucket must be fitted when lifting with the backhoe. Check that the load is not greater than the safe working load for the backhoe. To obtain the safe working load for the backhoe unit, subtract the weight of the bucket from the relevant figure given for safe working load - no bucket fitted, see ***Safe Working Loads - Craning (No Bucket Fitted)*** in SPECIFICATIONS Section.

Always use lifting tackle which is strong enough and in good condition. Check the load weight before choosing the lifting chains.

Use a signalman when lifting with the backhoe. Make sure you both understand and use the recognised signals.

Attach a handline to the load. Make sure the person holding the handline stands clear of the load and machine. Test the load by lifting it 25-50 mm (one or two inches) and slowly manoeuvring it across the ground with the backhoe controls.

Keep all persons clear of the load and machine while the load is on the backhoe.

Lower the load to the ground if you feel any instability - of the load or the machine.

Failure to take these precautions could result in death or injury.

For further information read, ***Lifting (Craning) Regulations and Safe Working Loads*** in SPECIFICATIONS Section.

2-2-7-2

1. Position the machine, *see* ***Preparing to use the Backhoe***.
2. Attach the lifting chains to the shackle **A**. Keep the chain length as short as possible, to prevent swinging. Start the lift with the bucket closed. Set the dipper in close to the boom.
3. Open the bucket (slowly) to bring the load up and out. Then swing the dipper out to raise the load. Open the bucket to adjust the height accurately.
4. Lower the load by bringing the dipper in.

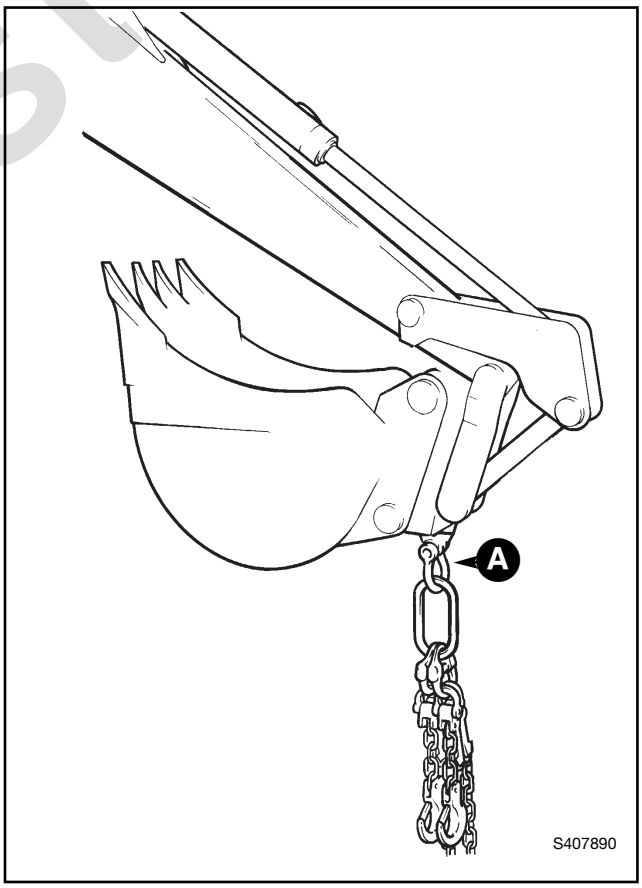

OPERATING IN LOW AND HIGH TEMPERATURES

Low Temperatures

In low temperature situations, take the following precautions. They will make for easier starting and prevent possible damage to your machine

1 Use the correct viscosity engine lubricating oil.

2 If available use a low temperature diesel fuel.

3 Use the correct coolant mixture.

4 Keep the battery at full charge.

5 Fill the fuel tank at the end of each work period. This will help to prevent condensation forming on the tank walls.

6 Protect the machine when not in use. Park the machine inside a building or cover it with a tarpaulin.

7 Install a cold weather starting aid. In very low temperatures, -20°C (-4°F). Below, -20°C (-4°F) an ether cold start kit is available, refer to manufactures instructions for use and fitment. Examples are fuel, oil and coolant heaters. Ask your JCB distributor for advice.

8 Remove snow from the bonnet and air intake area **A** (between windshield and bonnet) before starting, otherwise snow could get into the air cleaner.

⚠ WARNING

Do not attempt to operate the machine immediately after starting in cold conditions. The machine may not respond properly to control movements. Allow at least 10 minutes warm up time with the engine at half throttle. Operate the arm and bucket services to warm the hydraulic oil
3-1-1-5

9 If using snow chains, refer to the manufactures instructions for fitment and usage. When snow chains are ftted the front fender must be removed and the machine driven in 2 wheel steer 2nd gear.

High Temperatures

In high temperature situations, take the following precautions to prevent possible damage to the machine.

1 Use the correct viscosity engine lubricating oil.

2 Use the correct coolant mixture.

3 Check the coolant system regularly, keep the coolant at the correct level. Make sure there are no leaks.

4 Keep the radiator clean, regularly remove dirt and debris from the radiator and the engine.

5 Check the fan belt regularly.

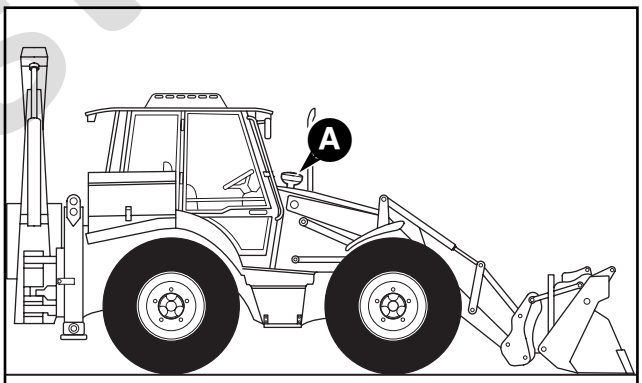

A407950

MOVING A DISABLED MACHINE

Preparation for Towing

Do not tow a machine unless there is no alternative. Remember that further damage might be caused to the machine by towing it. If at all possible repair the machine where it stands. If the machine must be towed read the following **CAUTIONS** and **WARNINGS** and use the procedure given here.

⚠ CAUTION

Use a rigid draw-bar. If a towing chain must be used, then use two towing vehicles. One towing vehicle should be coupled to the front of disabled machine. The other towing vehicle should be coupled to the rear of disabled machine, to provide braking power.

The towing vehicle(s) must have enough pulling and braking power to move and stop the machine.
0077

1 Engage the parking brake.

2 Set the forward/reverse lever to neutral.

3 Remove the front **C** and rear **D** drive propshafts. Refer to Service Manual 9803/3275 section F for fitting of propshaft procedure.

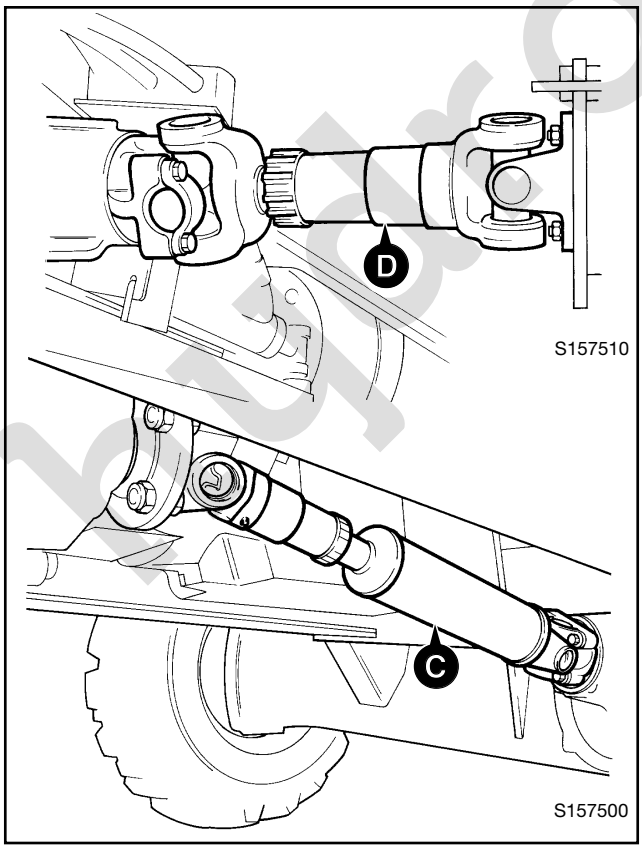

4 Prepare the machine for travel. If the engine cannot be run, the backhoe, loader and stabilisers must be hoisted into their transport positions and secured.

The procedure for doing this will depend on the machine's condition and its hydraulic circuits.

For this reason you should contact your JCB Distributor for help and advice before attempting this work.

5 Attach the drawbar to towing points **A** or **B**. Both towing points at either the front or the rear of the machine must be used to spread the load evenly. The maximum load is limited to 7500kg for each tow point within 22º, as shown at **E**.

⚠ WARNING

Block the loader arms before attaching the draw-bar.
2-2-7-4

The machine is now ready for towing. Make sure you understand what the towing driver will be doing. Obey his instructions and all relevant regulations.

⚠ CAUTION

Do not tow faster than 16 Kph (10 mph).

Also note that if the engine cannot be started, the effort required to steer the machine is greatly increased.

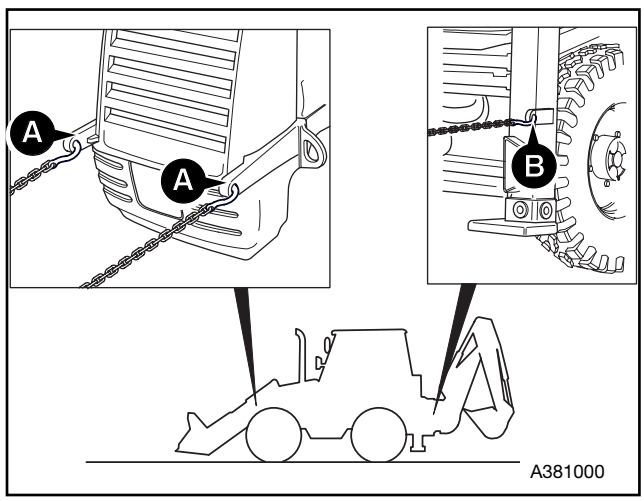

LIFTING A MACHINE

The procedure detailed below is NOT applicable for airlifting. Refer to JATEU HEL section for safe lifting with helicopter.

Lifting points are provided on the chassis **A** and the stabiliser legs **B**.

Carry out the following procedure when lifting a machine:

The backhoe is in the tucked in position and the boom and slew locks are fully engaged.

Remove all attachments.

Switch OFF the engine, remove the key, shut window(s), vacate the machine and shut the door.

Remove all loose equipment from machine exterior.

Check the unladen weight of the machine, *see* ***Static Dimensions*** *(SPECIFICATIONS section).*

⚠ WARNING

You can be injured if you use faulty lifting equipment. Make sure that lifting equipment is in good condition. Make sure that lifting tackle complies with all local regulations and is suitable for the job. Make sure that lifting equipment is strong enough for the job.
INT-1-3-7

Attach lifting equipment to lifting points as shown.

Take the weight of the machine. If the lifting equipment is fouling on the machine use spreader bars to prevent damage.

Check that the lifting eye is positioned directly above the machine centre of gravity, *see* ***Static Dimensions*** *(SPECIFICATIONS section).*

⚠ DANGER

Do not stand underneath a raised load. Stand clear and to one side until the load has been safely lowered. Make sure that the area is clear of other people before lowering the load. If you do not follow these precautions you or others could be killed or seriously injured.
2-3-5-3

⚠ WARNING

Bad communications can cause accidents. Keep people around you informed of what you will be doing. If you will be working with other people, make sure any hand signals that may be used are understood by everybody. Work sites can be noisy, do not rely on spoken commands.
INT-2-2-3

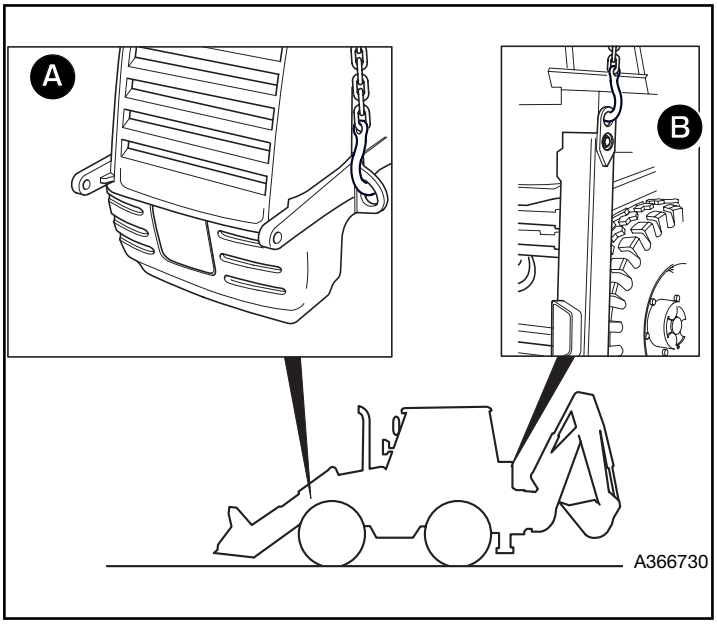

TRANSPORTING THE MACHINE

The safe transit of the load is the responsibility of the transport contractor and driver. Any machine, attachments or parts that may move during transit must be adequately secured.
5-2-5-9

Note 1: Before transporting the machine make sure you will be obeying the rules and laws of all the areas that the machine will be carried through.

Make sure that the transporting vehicle is suitable. See *Static Dimensions (SPECIFICATIONS section)* for the dimensions of your machine.

Note 2: Before loading the machine into a cargo hold with a height restriction, if applicable, remove the detachable cab roof section **D**. For overall machine heights see *Static Dimensions (SPECIFICATIONS section*). Undo the retaining bolts and stow the roof section correctly, see *DETACHABLE ROOF SECTION,* ***Removing*** *(OPERATION section)***.**

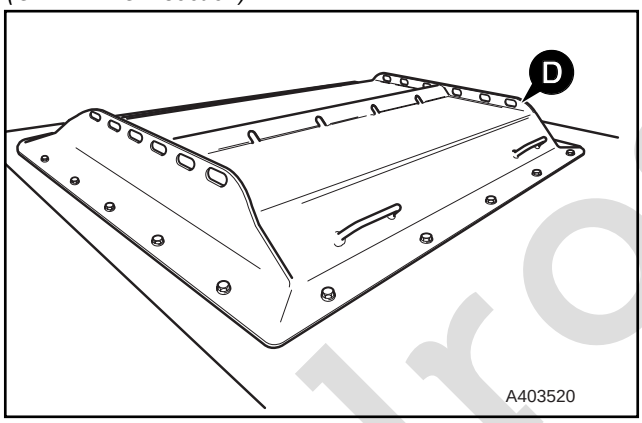

⚠ WARNING

Before moving the machine onto the trailer, make sure that the trailer and ramp are free from oil, grease and ice. Remove oil, grease and ice from the machine tyres. Make sure the machine will not foul on the ramp angle. See Static Dimensions (SPECIFICATION section) for the minimum ground clearance of you machine.
2-2-7-5/1

1 Place chocks at the front and rear of the trailer wheels.

2 Move the machine onto the trailer.
- **a** Make sure the ramps are correctly in place and secure.
- **b** Set the loader shovel and backhoe as in *Preparing for Road Travel (OPERATION section).*
- **c** Carefully drive the machine onto the trailer.

3 Engage the parking brake and set the drive to neutral.

4 When the machine is safely in position, release the boom lock, lower the backhoe onto the trailer. Lower the stabilisers.

5 Fit the slew lock.

Note 3: If for any reason the slew lock can not be fitted, then the bucket must be securely lashed to the trailer bed, if no bucket is fitted, then secure the dipper end to the trailer bed.

6 Lower the loader shovel and fit the strut **A**.

Note 4: The machine can be transported together with its ancillary equipment if required. The equipment must be correctly stowed, see ***Ancillary Equipment*** *(OPTIONAL ATTACHMENTS Section)* for the correct procedure.

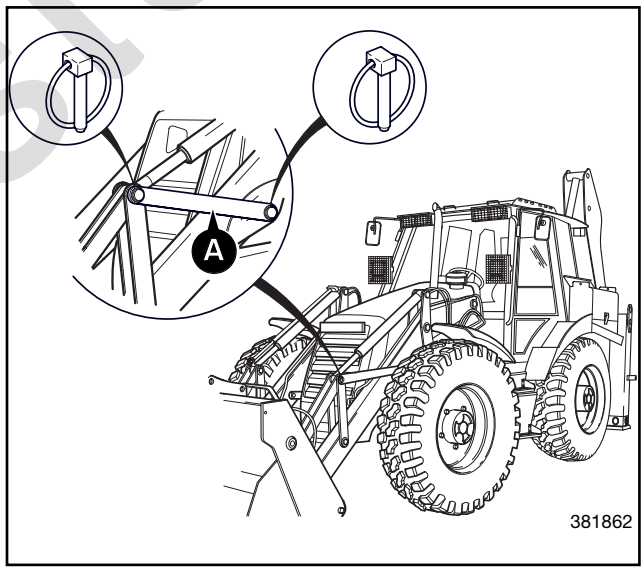

TRANSPORTING THE MACHINE (continued)

7 Check that the overall height of the load is within regulations, see **Note 2** opposite. Adjust if necessary.

8 Fit the loader and backhoe lever locks, see Backhoe and Loader Controls.

9 Switch off the engine.

10 Secure the cab.

11 Cover the exhaust stack.

12 Put chocks at the front and rear of all four tyres. Anchor the machine to the trailer with chains. The anchor points **C** are shown on the illustration.

13 Measure the maximum height of the machine from the ground. Make sure the truck driver knows the clearance height before he drives away.

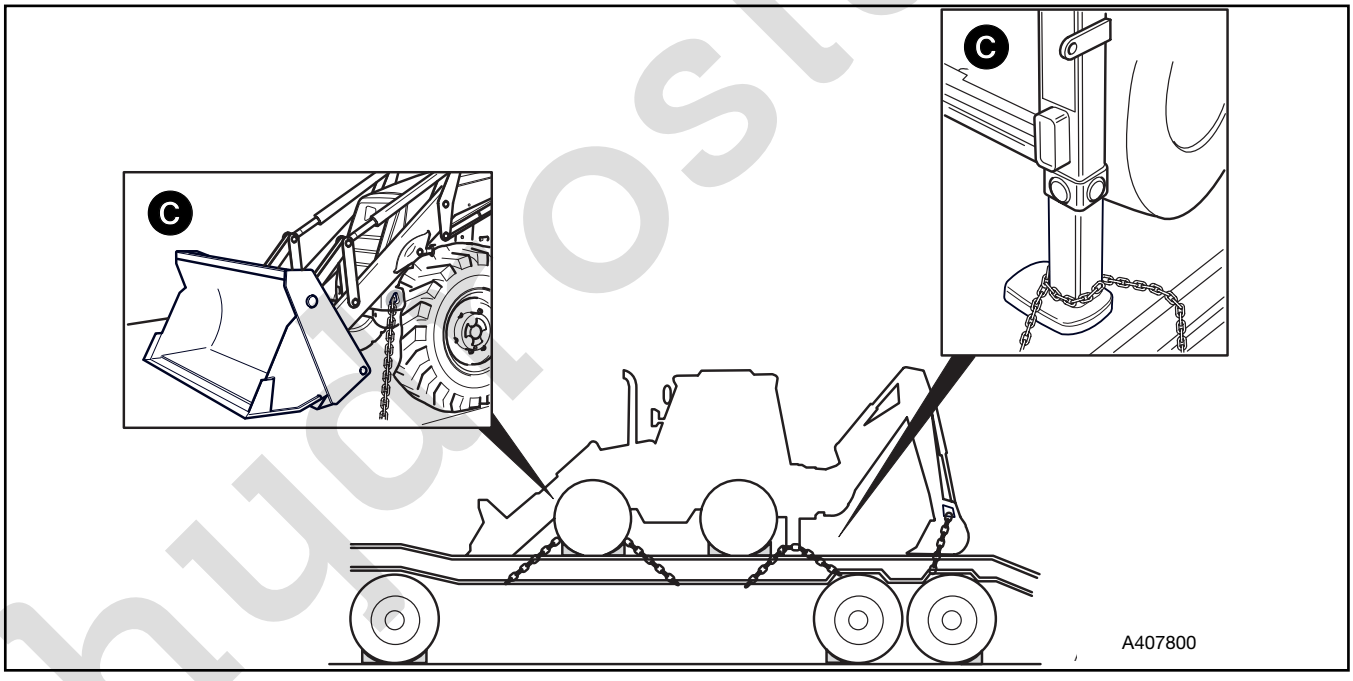

DETACHABLE ROOF SECTION

The prefered method for removing and replacing the detachable roof section is to use a mechanical lifting device (crane or hoist). If however a suitable lifting device is not available, the roof section can be removed manually using 4 people as illustrated.

Note: The detachable roof section **A** weighs 48.5 kg and requires 4 people to safely remove and replace.

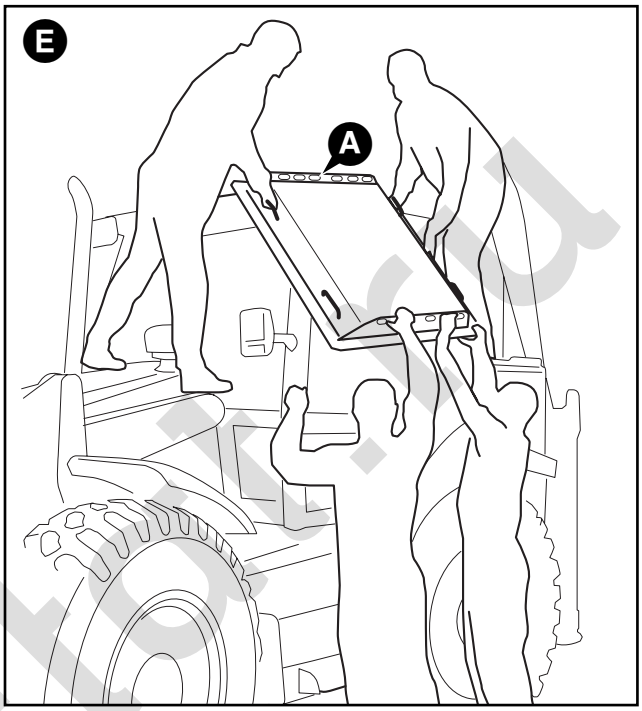

Removing

1 Park the machine on firm level ground. Lower the loader to the ground. Set the transmission to neutral and apply the parking brake. Stop the engine and remove the starter key.

2 Undo and remove the 20 bolts **B** together with washers **C**.

3 Remove the 4 spreader bars **D**.

4 Station 2 people on the machine and 2 people on the ground as shown at **E**. Using the lifting handles **F** remove the section and pass it to the people on the ground as shown at **E**.

5 Carefully remove the sealing gasket **G**. Roll up the gasket and stow, together with the bolts, washers and spreader bars, in the tools stowage box.

Replacing

1 Park the machine on firm level ground. Lower the loader to the ground. Set the transmission to neutral and apply the parking brake. Stop the engine and remove the starter key.

3 Carefully locate the sealing gasket **G** on the cab roof. Make sure that the holes in the gasket fit around the threaded holes in the cab roof.

4 Station 2 people on the machine and 2 people on the ground as shown at **E**. Using the lifting handles **F** lift the section and pass it to the people on the machine as shown at **E**.

5 Carefully locate the roof section on the gasket **G**, be sure not to dislodge the gasket. Locate the 4 spreader bars **D**. Fit the washers **C** and bolts **B** and tighten finger tight.

6 Use a 19mm socket and 1/2 inch drive ratchet tighten the bolts in the sequence shown at **H** the clamp bars are flat on the removable roof and no gaps can be seen between the clamps and the removable roof.

7 Further tighten bolts **B** in the sequence shown at **H** until the gasket begins to compress. Tighten the bolts in the same sequence a further 180 degrees (1/2 a turn).

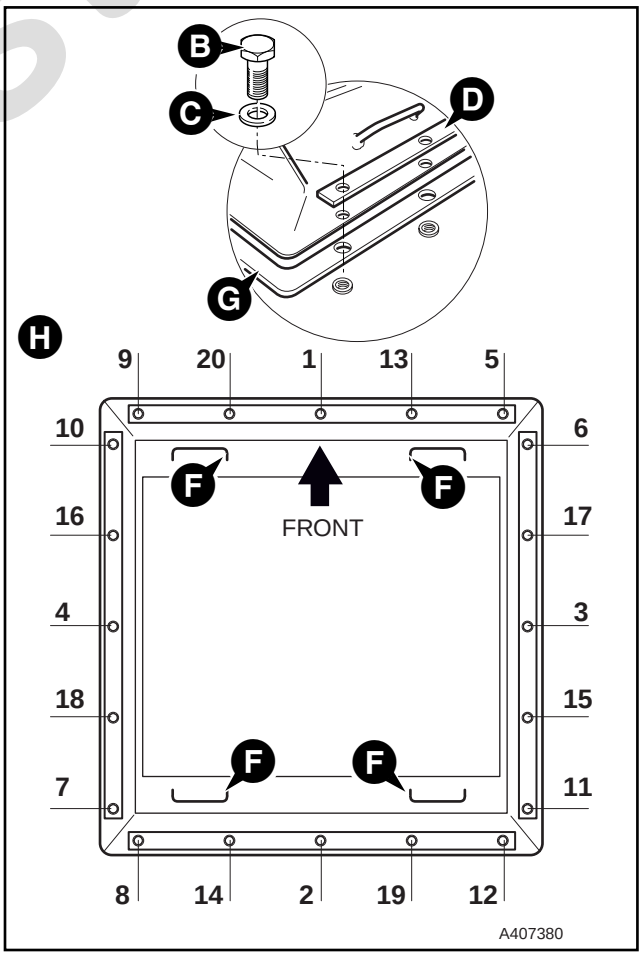

FIRE EXTINGUISHER

The following instructions are of a general nature intended to familiarise the user with basic techniques of using this hand portable fire extinguisher. Consult the extinguisher instruction label for specific procedures.

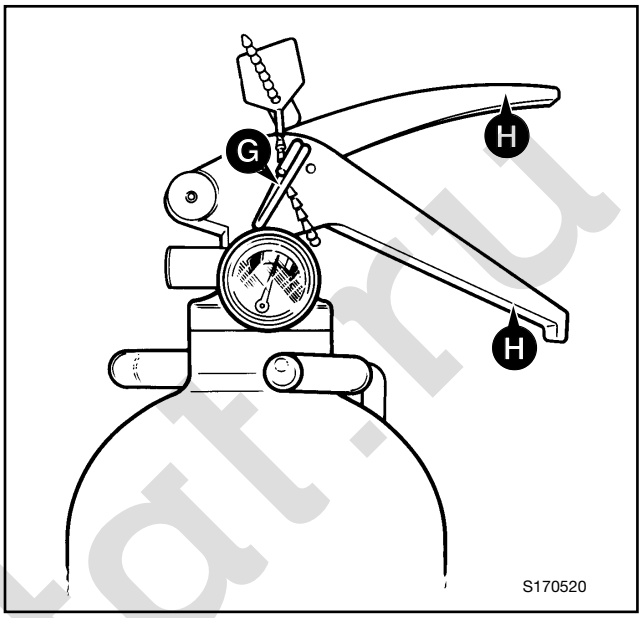

Using the Fire Extinguisher

The fire extinguisher should be inspected daily.

⚠ WARNING

Do not use the fire extinguisher in a confined space. Make sure that the area is well ventilated during and after using the extinguisher.
4-2-3-1

1 Remove extinguisher from its stowage bracket.

2 Hold the extinguisher upright, remove safety pin **G** which will snap the tamper proof seal.

3 Stand back from the fire a safe distance and aim, wherever possible, at the base of the fire.

4 Keeping the extinguisher upright, squeeze the triggers **H** together to discharge and sweep from side to side to cover the whole area of the fire. Move closer as the fire is extinguished but so so close as to scatter burning material. Release the handles to stop the discharge as soon as the fire is extinguished.

5 Watch out for re-ignition and use any remaining powder to extinguish.

⚠ WARNING

After any use, the extinguisher should be replaced or serviced.
4-2-3-2

LUBRICANTS - HEALTH AND SAFETY

It is most important that you read and understand this information and the publications referred to. Make sure all your colleagues who are concerned with lubricants read it too.

Hygiene

JCB lubricants are not a health risk when used properly for their intended purposes.

However, excessive or prolonged skin contact can remove the natural fats from your skin, causing dryness and irritation.

Low viscosity oils are more likely to do this, so take special care when handling used oils, which might be diluted with fuel contamination.

Whenever you are handling oil products you should maintain good standards of care and personal and plant hygiene. For details of these precautions we advise you to read the relevant publications issued by your local health authority, plus the following.

Storage

Always keep lubricants out of the reach of children.

Never store lubricants in open or unlabelled containers.

Waste Disposal

All waste products should be disposed of in accordance with all the relevant regulations.

The collection and disposal of used oil should be in accordance with any local regulations. Never pour used engine oil into sewers, drains or on the ground.

Handling

New Oil.

There are no special precautions needed for the handling or use of new oil, beside the normal care and hygiene practices.

Used Oil.

Used engine crankcase lubricants contain harmful contaminants.

Here are precautions to protect your health when handling used engine oil:

1. Avoid prolonged, excessive or repeated skin contact with used oil.
2. Apply a barrier cream to the skin before handling used oil.
3. Note the following when removing engine oil from skin:
   - **a** Wash your skin thoroughly with soap and water.
   - **b** Using a nail brush will help.
   - **c** Use special hand cleansers to help clean dirty hands.
   - **d** Never use petrol, diesel fuel, or paraffin for washing.
4. Avoid skin contact with oil soaked clothing.
5. Don't keep oily rags in pockets.
6. Wash dirty clothing before re-use.
7. Throw away oil-soaked shoes.

First Aid - Oil

Eyes.
In the case of eye contact, flush with water for 15 minutes. If irritation persists, get medical attention.

Swallowing.
If oil is swallowed do not induce vomiting. Get medical advice.

Skin.
In the case of excessive skin contact, wash with soap and water.

Spillage

Absorb on sand or a locally approved brand of absorbent granules. Scrape up and remove to a chemical disposal area.

Fires

Extinguish with carbon dioxide, dry chemical or foam. Fire-fighters should use self-contained breathing apparatus.

SERVICE REQUIREMENTS

Introduction

Your machine has been designed and built to give maximum performance, economy and ease of use under a wide variety of operating conditions. Prior to delivery, your machine was inspected both at the Factory and by your Distributor to ensure that it reaches you in optimum condition. To maintain this condition and ensure trouble free operation it is important that the routine services, as specified in this Handbook, are carried out at the recommended intervals.

Maintenance

This section of the Handbook gives full details of the service requirements necessary to maintain your JCB machine at peak efficiency.

To further protect your machine's performance it is essential your JCB Distributor carries out an initial service and inspection when the machine is one month old or when it has completed 100 hours of operation (whichever occurs first). You should notify your Distributor in advance to allow the necessary arrangements to be made.

It can be seen from the Service Schedules on the following pages that many essential service checks should only be carried out by a JCB trained specialist. Only JCB Distributor Service Engineers have been trained by JCB to carry out such specialist tasks, and only JCB Distributor Service Engineers are equipped with the necessary special tools and test equipment to perform such tasks, thoroughly, safely, accurately and efficiently.

JCB regularly updates its Distributors advising them of any product developments, changes in specifications and procedures. Therefore only a JCB Distributor is fully able to maintain and service your machine.

At the rear of this Handbook is a Service Record Sheet which will enable you to plan your service requirements and keep a service history record. This record sheet should be dated, signed and stamped by your Distributor each time your machine is serviced.

Remember, if your machine has been correctly maintained, not only will it give you improved reliability but its resale value will be greatly enhanced.

Owner/Operator Support

JCB together with your Distributor wants you to be completely satisfied with your new JCB machine. If you do encounter a problem however, you should contact your Distributor's Service Department who are there to help you!

You will have been given the names of the relevant service contacts at your Distributor when the machine was installed.

To get the most from your Distributor please help them to satisfy you by:

1 Giving your name, address and telephone number.
2 Quoting your machine model and serial number.
3 Date of purchase and hours of work.
4 Nature of the problem.

Remember, only your JCB Distributor has access to the vast resources available at JCB to help support you. In addition, your Distributor is able to offer a variety of programmes covering Warranty, Fixed Price Servicing, Safety Inspections, including weight tests, covering both legal and insurance requirements:

Service/Maintenance Agreements

To help plan and spread the costs of maintaining your machine, we strongly recommend you take advantage of the many Service and Maintenance Agreements your Distributor can offer. These can be tailor made to meet your operating conditions, work schedule etc.

Please consult your JCB Distributor for details.

Lifting Regulations - Inspections and Tests

Only your JCB Distributor can fully meet the requirements of the inspection and test parameters to suit UK Health & Safety Executive (H.S.E.) legal requirements along with providing Annual Inspections to meet your Insurance Company Policy conditions.

Only your JCB Distributor has the ability to meet the definition described covering a "Competent Person" to carry out these necessary tests and inspections. This ensures that only JCB Factory trained, experienced and up-to-date Engineers supported with all of the available data and material provided only to a JCB Distributor will ensure a thorough and reliable standard.

CLEANING THE MACHINE

Park the machine on firm level ground, engage the parking brake and set the transmission to neutral. Lower the attachments to the ground and stop the engine.

Clean the machine using water and/or steam. Do not allow mud, debris etc to build up in the following areas:

1 Backhoe hoses passing through mainframe.
2 Around twin slew rams.
3 Twin ram slew recess in chassis (centremount).
4 Kingpost slide rails (sideshift).
5 Kingpost hose tray and bottom 'shelf' (sideshift).
6 Recess between slew ram and kingpost casting (sideshift).

Do not allow mud to build up on the engine and transmission. Make sure the radiator grille is not clogged up.

⚠ WARNING

Airborne particles of light combustible material such as straw, grass, wood shavings, etc. must not be allowed to accumulate within the engine compartment or in the propshaft guards (when fitted). Please inspect these areas frequently and clean at the beginning of each work shift or more often if required. Before opening the engine cover, ensure that the top is clear of debris.

5-3-1-12/2

Avoid using neat detergent - always dilute detergents as per the manufacturer's recommendations, otherwise damage to the paint finish may occur.

It is important to note that excessive power washing can cause damage to the seals or bearings. Take care during routine machine washing not to direct high power water jets directly at oil seals or universal joints.

Note: The machine must always be greased after pressure washing or steam cleaning.

Always adhere to local regulations regarding the disposal of debris created from machine cleaning.

The illustrations show some of the areas that must be thoroughly cleaned as required.

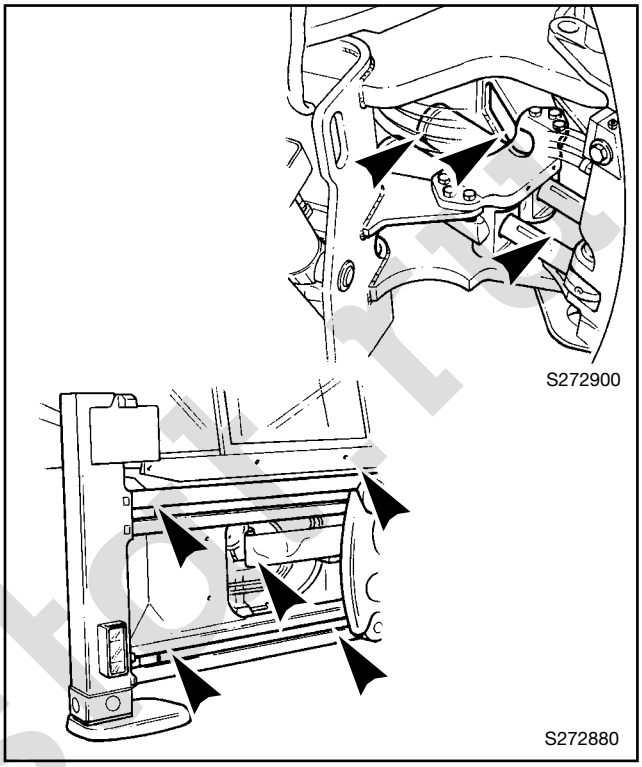

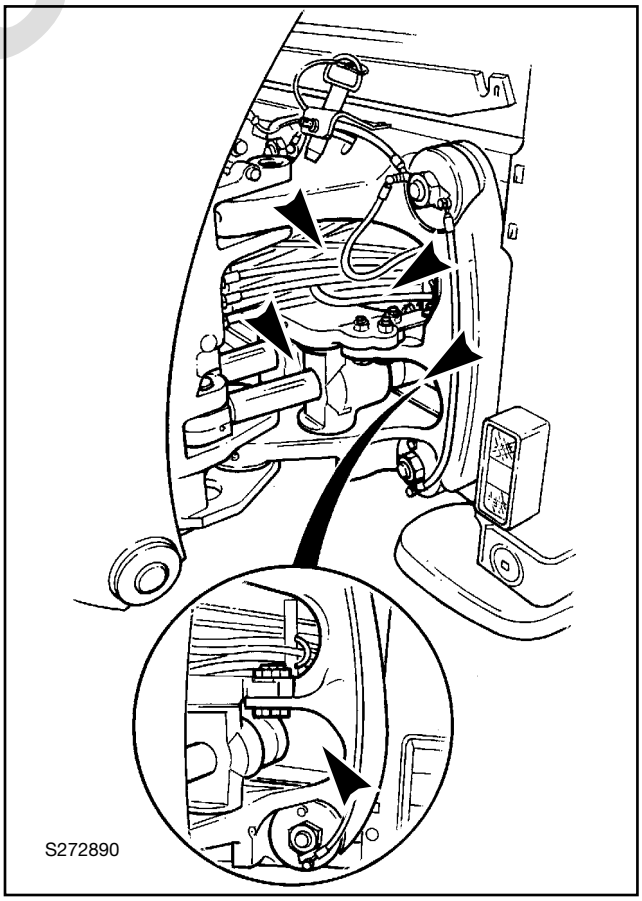

CHECKING FOR DAMAGE

Inspect steelwork for damage. Note damaged paintwork for future repair.

Make sure all pivot pins are correctly in place and secured by their locking devices.

Ensure that the steps and handrails are undamaged and secure.

Check for broken or cracked window glass. Replace damaged items.

Check all bucket teeth for damage and security.

Check all lamp lenses for damage.

Inspect the tyres for damage and penetration by sharp objects.

Check that all safety decals are in place and undamaged. Fit new decals where necessary.

OBTAINING REPLACEMENT PARTS

We recommend you fit only JCB Genuine Parts. A Backhoe Loader Parts Book will help you identify parts and order them from your JCB distributor.

Your dealer will need to know the exact model, build and serial number of your machine. The machine's serial number is stamped on a data plate at the right hand side of the machine.

The data plate also shows the serial numbers of the engine, transmission and axle(s). But remember if any of these units have been changed, the serial number on the data plate may be wrong. Check on the unit itself.

⚠ WARNING

Some parts of your machine have Warning Decals attached. Before you fit a replacement part, make sure it has its warning decal, fixed in its correct position. See *Safety Decals in INTRODUCTION section*. Contact your distributor if the decal is missing.

2-3-5-2/

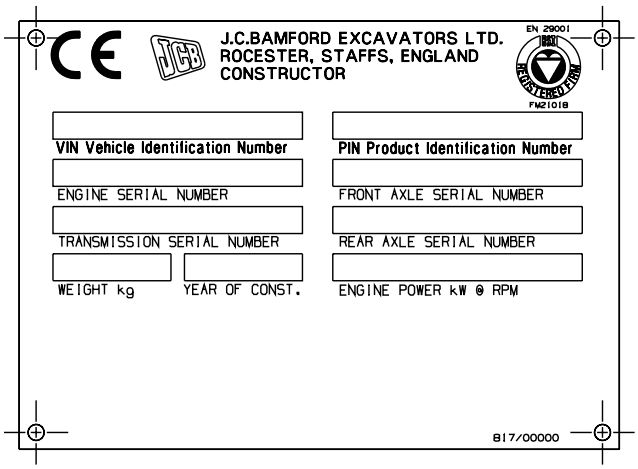

A276550

SERVICE SCHEDULES

A badly maintained machine is a danger to the operator and the people working around him. Make sure that the regular maintenance and lubrication jobs listed in the service schedules are done to keep the machine in a safe and efficient working condition.

⚠ WARNING

Maintenance

Maintenance must be done by suitably qualified personnel. Before attempting any maintenance work, make sure the machine is safe. Park on level ground. If it is necessary to work with the loader arms raised, then the loader arm safety strut must be fitted as shown in *Loader Arm Safety Strut in MAINTENANCE section*.

2-3-1-1

Apart from the daily jobs, the schedules are based on machine running hours. Keep a regular check on the hourmeter readings to correctly gauge service intervals. Do not use a machine which is due for a service. Make sure any defects found during the regular maintenance checks are rectified immediately.

Calendar equivalents:

10 Hours	=	Daily
50 Hours	=	Weekly
500 Hours	=	Six Months
1000 Hours	=	Yearly
2000 Hours	=	2 Years

Pre-start Cold Checks **Service Points and Fluid Levels**	**Operation**	**10 Hr**	**50 Hr**	**†100 Hr**	**500 Hr**	**1000 Hr**	**2000 Hr**
ENGINE							
Oil level	- Check	•	•				
Oil and Filter ④	- Change			•	•	•	•
Air Cleaner Outer Element ⑥	- Change					•	•
Air Cleaner Inner Element	- Change						•
Fuel Filter	- Change			•	•	•	•
Fuel Filter	- Drain		•				
Coolant Quality/Level	- Check	•	•	•	•	•	•
Fuel Sedimenter	- Drain and Clean		•	•	•	•	•
Fan Belt Tension/Condition	- Check		•	•	•	•	•
Valve Clearances ③	- Check and Adjust						•
Engine Mounting Bolts for Tightness ③	- Check			•	•	•	•
Radiator	- Clean				•	•	•
All Hoses - Condition	- Check			•	•	•	•
TRANSMISSION, AXLES AND STEERING							
Transmission Oil Level	- Check	•	•	•	•		
Transmission Oil ⑧	- Change					•	•
Transmission Filter	- Change			•	•	•	•
Axle Oil Level (incl. Hubs when applicable) ①	- Check			•	•	•	•
Axle Oil (incl. Hubs when applicable) ⑨⑩	- Change	See ⑩					
Tyre Pressures/Condition	- Check		•	•	•	•	•
Front Hub Bearings ③	- Check			•	•	•	•
Transmission Strainer	- Clean					•	•
Drive Shafts	- Security/Grease			•	•	•	•
Steer Axle Movement/Shimming ③	- Check			•	•	•	•
Steer Axle Pivots and Linkages ⑦	- Grease			•	•	•	•
Front Axle Main Pivot	- Grease	•	•	•	•	•	•
HYDRAULICS							
Oil Level ②	- Check	•	•	•	•	•	
Oil ③	- Sample/Change						•
Oil Filter	- Change			•	•	•	•
Rams - Chrome Condition	- Check			•	•	•	•

SERVICE SCHEDULES (continued)

Pre-start Cold Checks Service Points and Fluid Levels	Operation	10 Hr	50 Hr	†100 Hr	500 Hr	1000 Hr	2000 Hr
Hydraulic Oil Cooler	- Clean				•	•	•
Hydraulic Oil Strainer	- Clean						•
Hydraulic Tank Filler Cap (with integral filter)	- Change						•
Hydraulic Pump Drive Shaft	- Examine/Grease			•	•	•	•
BRAKES							
Brake System Fluid Level	- Check	•	•	•	•	•	•
Brake System Fluid ③	- Change						•
Parking Brake	- Check and Adjust			•	•	•	•
ELECTRICS							
Battery Electrolyte Level (if applicable)	- Check				•	•	•
Wiring for Chaffing/Routing	- Check		•	•	•	•	•
Battery Terminals for Condition and Tightness	- Check			•	•	•	•
BODYWORK AND CAB							
All Pins and Bushes	- Check and Grease	•	•	•	•	•	•
Door/Window Hinges	- Lubricate				•	•	•
All Cables	- Lubricate				•	•	•
Cab Heater Filter ⑥	- Clean/Change				•	•	•
Hydraclamp ③	- Check and Adjust			•	•	•	•
Door - Fit and Catches	- Check			•	•	•	•
Cab Seat - Operation	- Check			•	•	•	•
Front Mudguards - Security (if fitted)	- Check			•	•		
Windscreen Washer Fluid Level	- Check	•	•	•	•	•	•
Boom Lock Engagement	- Check	•	•	•	•	•	•
Condition of Paintwork	- Check			•	•	•	•
Stabiliser Legs (Sideshift)	- Check/Adjust		•	•	•	•	•
Machine Generally ③	- Check and Clean	•	•	•	•	•	•
ATTACHMENTS							
Multi-Purpose Shovel	- Grease	•	•	•	•	•	•
Backhoe & Loader Quick Hitch	- Grease	•	•	•	•	•	•
Sideshift Carriage	- Grease	•	•	•	•	•	•

Functional Test and Final Inspection	Operation	10 Hr	50 Hr	†100 Hr	500 Hr	1000 Hr	2000 Hr
ENGINE							
Idle Speed ③	- Check and Adjust			•	•	•	•
Stall Speed ③	- Check			•	•	•	•
Maximum No-Load Speed ③	- Check and Adjust			•	•	•	•
Exhaust Smoke (excessive)	- Check		•	•	•	•	•
Exhaust System Security ③	- Check			•	•	•	•
Air Inlet System Security	- Check			•	•	•	•
Throttle System and Control Cable ③	- Check			•	•	•	•
TRANSMISSION, AXLES AND STEERING							
Steer Modes - Operation	- Check	•	•	•	•	•	•
2WD/4WD Selection	- Check			•	•	•	•

SERVICE SCHEDULES (continued)

Wheel Nuts Torque	- Check	•	•	•	•	•	•
Forward/Reverse and Gear Change - Operation	- Check			•	•	•	•

Functional Test and Final Inspection	**Operation**	**10 Hr**	**50 Hr**	**†100 Hr**	**500 Hr**	**1000 Hr**	**2000 Hr**
Hydraulic Speed Control - Operation (if fitted)	- Check			•	•	•	•
Steer Circuit Pressure ③	- Check			•	•	•	•
Transmission Main Line Pressure ③	- Check				•	•	•
Transmission Dump Operation	- Check			•	•	•	•
Neutral Start Operation	- Check		•	•	•	•	•
Clutch Pack Pressures ③	- Check			•	•	•	•
HYDRAULICS							
MRV Pressure ③	- Check and Adjust			•	•	•	•
Operation All Services	- Check		•	•	•	•	•
Hose Burst Protection Valves (if fitted)	- Check			•	•	•	•
Offloader Valve Pressure ③	- Check and Adjust			•	•	•	•
Auxiliary Circuit & Pressures ③	- Check and Adjust			•	•	•	•
BRAKES							
Foot Brake - Operation	- Check	•	•	•	•	•	•
Parking Brake - Operation	- Check	•	•	•	•	•	•
Servo Operation (if fitted)	- Check			•	•	•	•
ELECTRICS							
Starter Motor	- Check			•	•	•	•
Alternator - Output	- Check			•	•	•	•
All Electrical Equipment Operation, (e.g. warning lights, beacon, alarms, horn, wipers etc)	- Check	•	•	•	•	•	•
Operation of Stop Control/E.S.O.S.	- Check	•	•	•	•	•	•
BODYWORK AND CAB							
Teeth and Side Cutters	- Check			•	•	•	•
Doors and Windows - Fitment/Leaks	- Check			•	•	•	•
Seat/Seat Belts	- Check			•	•	•	•

† Note: First 100 Hours Service only, to be completed by your JCB Distributor.

① **Note:** Check for leaks every 50 hours, check level if leaking.

② **Note:** Check the hydraulic fluid level with the loader and backhoe in the travel position.

③ **Note:** Jobs which should only be done by a specialist are indicated by a ③.

④ **Note:** If operating under arduous conditions, change the engine oil and filter every 250 hours.

⑤ **Note:** Check generally for leaks on ALL systems, for example, hydraulic, engine (coolant, fuel and oil), transmission, brakes, axles etc. If a leak is evident find the source and repair as required. Make sure that the system is topped up with the recommended fluid after repair. Examples of machine general damage are paintwork, toe plate, glazing rubbers etc., repair any damage as required. If any of the repair or top up procedures are not detailed in this handbook, then contact your local JCB Distributor for advice.

⑥ **Note:** If operating in dusty working environments, change more frequently.

⑦ **Note:** The axles and driveshafts are factory greased with a high performance grease, if during service a standard grease is used, then the interval must be reduced to every 50 hours, contact your JCB Distributor for advice.

⑧ **Note:** After a major transmission repair, the new oil should be run to operating temperature and changed again to remove any contamination which entered during the repair. Change the oil and filter after a further 100 hours if the oil was heavily contaminated because of, or from the failure (eg. water contamination).

⑨ **Note:** After a hub repair, the new oil should be run to operating temperature and changed again to remove any contamination which entered during the repair. Change the oil again after a further 100 hours to remove any bedding-in wear. This is particularly important if new brake plates have been fitted.

⑩ **Note:** Change the oil at 3 yearly interval.

LOADER ARM SAFETY STRUT

Installing

Install the loader arm safety strut as detailed below before working underneath raised loader arms.

⚠ WARNING

Raised loader arms can drop suddenly and cause serious injury. Before working under raised loader arms, fit the loader arm safety strut.
2-1-1-6

1 Empty the Shovel and Raise the Loader Arms fully.

2 Stop the Engine
Remove the starter key.

⚠ WARNING

You could be killed or injured if the loader control is accidentally operated. Make sure no-one comes near the machine while you release the safety strut.
2-3-1-2

3 Release the Strut
a Release fastener **A**.
b Remove strut **C** from its stowage bracket.

4 Install the Strut
a Push strut **C** over the ram piston rod.
b Secure the strut in position with strap **B**.

5 Lower the Strut Onto the Cylinder
To prevent any chance of the loader arms creeping down and trapping your fingers, the loader arms should be carefully lowered onto the safety strut as shown.

Start the engine and slowly lower the loader arms onto the safety strut, stop the movement immediately the weight of the loader arms is supported by the safety strut.

Note: When lowering the loader, operate the control lever carefully. 'Feather' the lever to lower the loader very slowly.

Removing

1 Fully Raise the Loader Arms
To take the weight off the safety strut.

2 Stop the Engine
Remove the starter key.

⚠ WARNING

You could be killed or injured if the loader control is accidentally operated. Make sure no one comes near the machine while you remove the safety strut.
2-3-1-3

3 Remove the Strut
a Undo the strap **B**.
b Remove the strut **C** from the ram piston rod.

4 Stow the Strut
Secure the strut in its stowage position with fastener **A**.

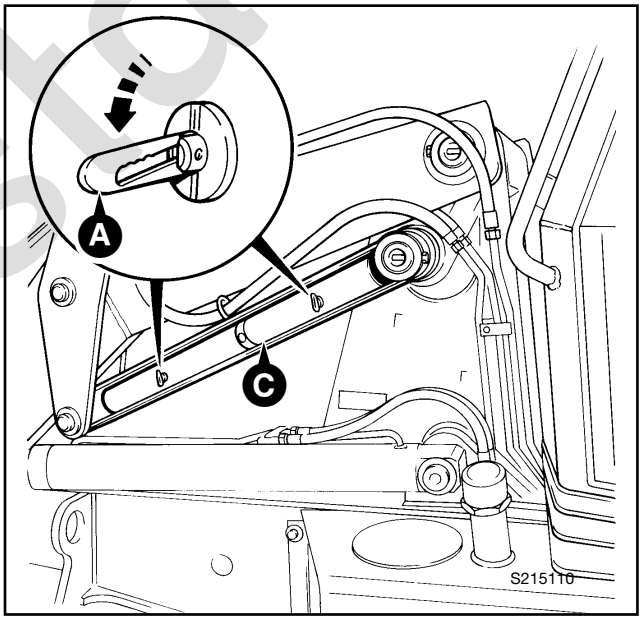

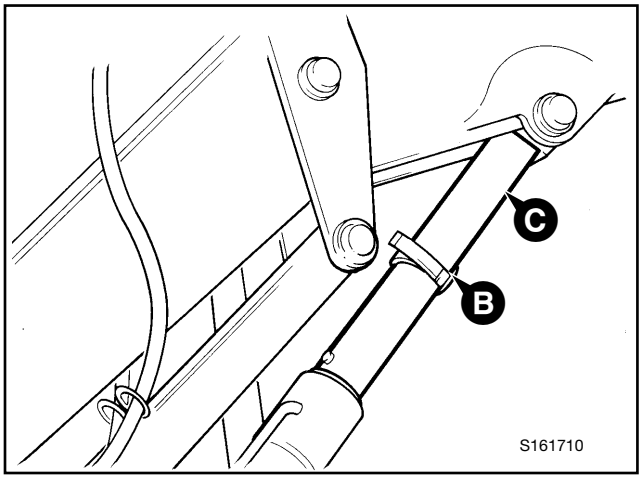

ENGINE PANELS

Removing and Fitting a Side Panel

⚠ WARNING

The loader arms must be raised and locked before you remove an engine side panel. Keep the arms locked up until the side panel is put back. If you do not lock the loader arms, the shovel can fall and you could be crushed. See *Loader Arm Safety Strut in MAINTENANCE section.*
2-3-1-4/1

1 Raise and lock the Loader Arms.

⚠ WARNING

Do not remove the engine side panels while the engine is running.
2-3-1-5

2 Stop the engine and remove the starter key.

3 To remove a side panel:

Insert the key in the side panel lock, turn the handle **A** and holding the handle **A** and grab handle **B** lift the panel off.

4 Reverse the above procedure to refit the panel, remember to lock the panel once it has been fitted.

Removing and Fitting the Access Panel

⚠ WARNING

Raised loader arms can drop suddenly and cause serious injury. Before working under raised loader arms, fit the loader arm safety strut.
2-1-1-6

To gain access to the engine oil dipstick, there is a small access panel **F** fitted in the right hand side panel.

To remove the access panel:

1 Make sure the park brake is engaged and the transmission set to neutral. If the loader arms are raised, lower them under their own weight, or fit the safety strut.

2 Use the starter switch key to unlock the panel.

3 Remove the panel (to prevent the panel from being lost, it is attached to a retaining wire).

4 Reverse the above procedure to refit the panel, remember to lock the panel once it has been fitted.

Removing and Fitting The Engine Cover

1 Remove the side panels.

⚠ WARNING

A hot exhaust will burn you. Make sure the exhaust stack is cool before removing it.
2-3-1-6

2 Lift-off the stack **C** and pre cleaner **F**.

3 Remove bolts **D** and lift off the cover **E**.

4 Reverse the above procedure to refit the engine cover.

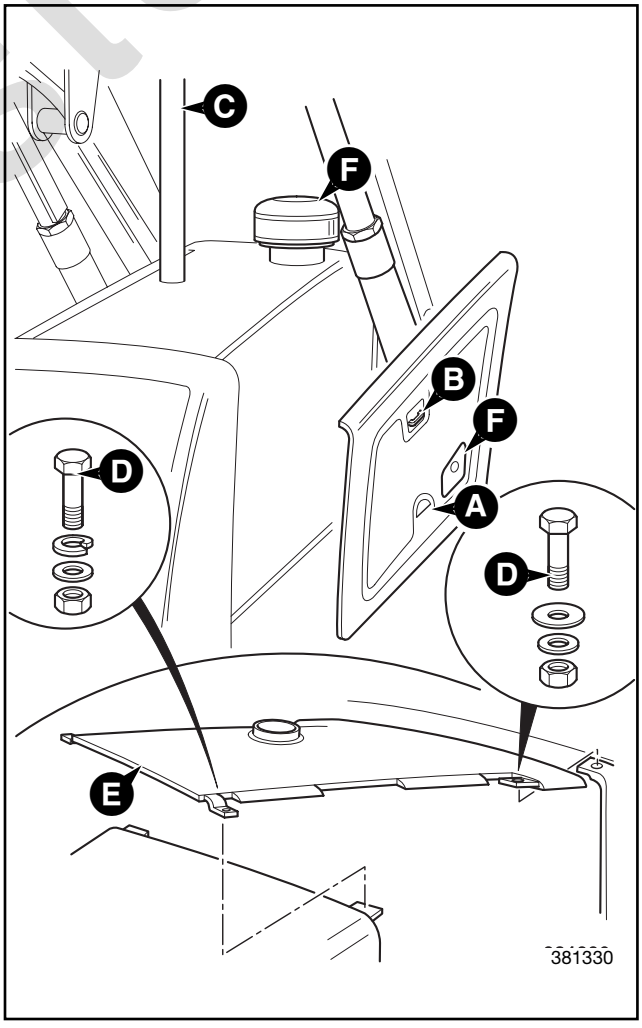

8642 - 1

SEAT BELT

Checking the Seat Belt Condition and Security

⚠ WARNING

When a seat belt is fitted to your machine replace it with a new one if it is damaged, if the fabric is worn, or if the machine has been in an accident. Fit a new seat belt every three years.

2-3-1-7/1

Inspect the seat belt for signs of fraying and stretching. Check that the stitching is not loose or damaged. Check that the buckle assembly is undamaged and works correctly.

Check that the belt mounting bolts are undamaged, correctly fitted and tightened.

ROPS/FOPS STRUCTURE

Checking the ROPS/FOPS Structure

⚠ WARNING

The machine is fitted with a Roll Over Protection Structure (ROPS) and a Falling Objects Protection Structure (FOPS). You could be killed or seriously injured if you operate the machine with a damaged or missing ROPS/FOPS. If the ROPS/FOPS has been in an accident, do not use the machine until the structure has been renewed. Modifications and repairs that are not approved by the manufacturer may be dangerous and will invalidate the ROPS/FOPS certification.

INT-2-1-9/3

For assistance, contact your JCB distributor. Failure to take these precautions could result in death or injury to the operator.

Check the structure for damage. Check that the mounting bolts are installed and undamaged. Check the bolt torques. Tighten them to the correct torque if necessary.

Torque Settings

Bolts **A** 205 Nm (150 lbf ft)
Bolts **B** 476 Nm (352 lbf ft)
Bolts **C** 205 Nm (150 lbf ft)

IMPORTANT NOTE:
The detachable section of the cab roof section **D** must be fitted correctly for the ROPS/FOPS certification to be valid see *DETACHABLE ROOF SECTION*, ***Replacing***, *(OPERATION Section)* for the correct procedure.

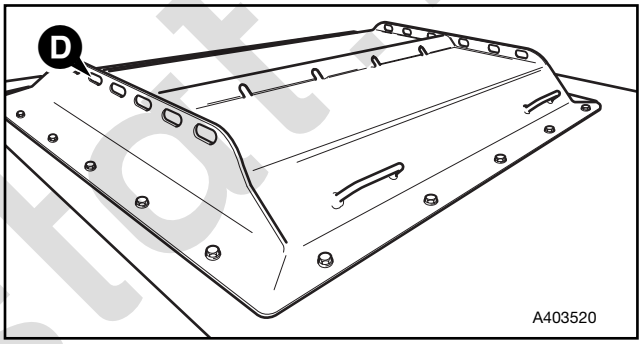

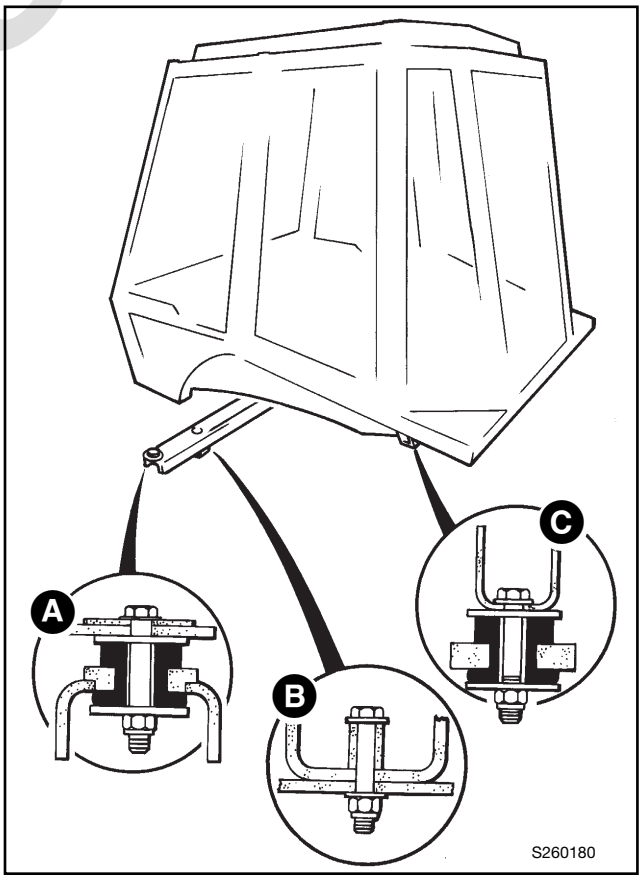

GREASING

You must grease the machine regularly to keep it working efficiently. Regular greasing will also lengthen the machine's working life.

The machine must always be greased after pressure washing or steam cleaning.

⚠ WARNING

You will be working close into the machine for these jobs. Lower the attachments if possible. Remove the starter key and disconnect the battery. This will prevent the engine being started. Make sure the parking brake is engaged.

Chock all four wheels before getting under the machine.

2-3-2-1

Greasing should be done with a grease gun. Normally, two strokes of the gun should be sufficient. Stop greasing when fresh grease appears at the joint.

In the following illustrations, the grease points are numbered. Count off the grease points as you grease each one. Refit the dust caps after greasing.

Loader Arms

For each grease point shown, there is another on the other side of the machine.

Total 22 grease points.

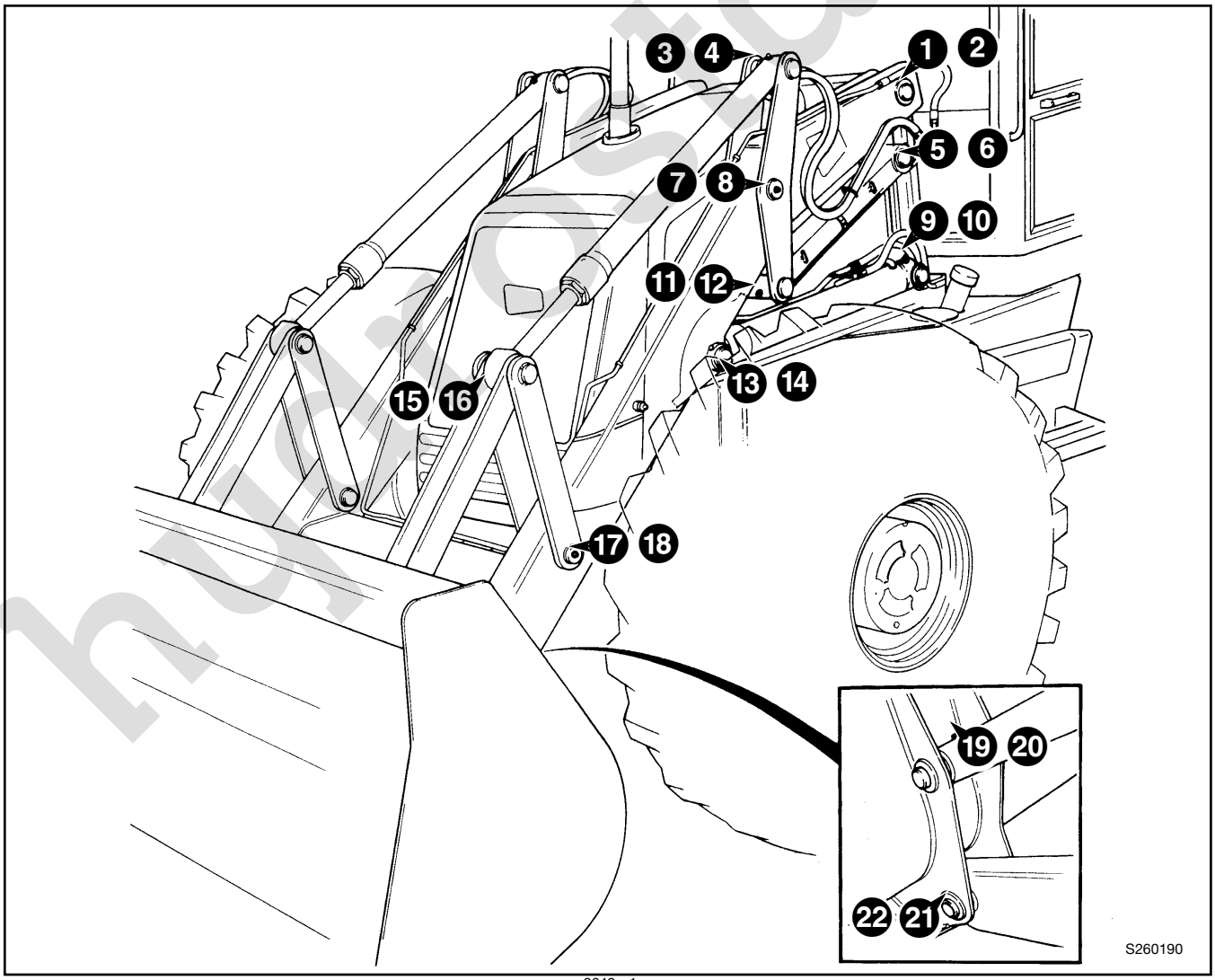

8642 - 1

GREASING
(continued)

Backhoe & Quick Hitch

22 Grease Points

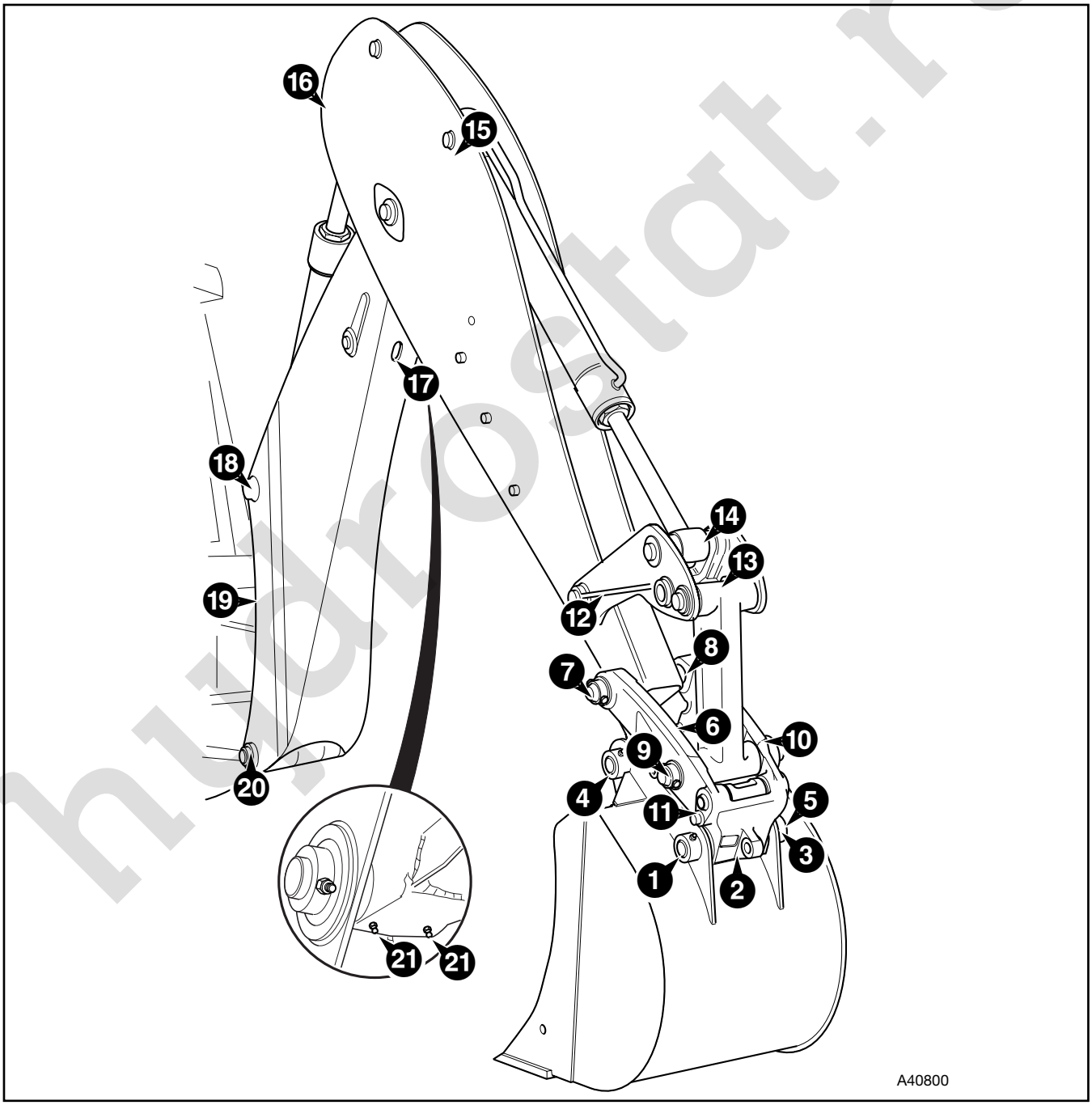

GREASING
(continued)

Front Axle

9 Grease Points

Note: Grease point **5** is a remote grease point mounted on the side of the mainframe chassis (near the left front wheel).

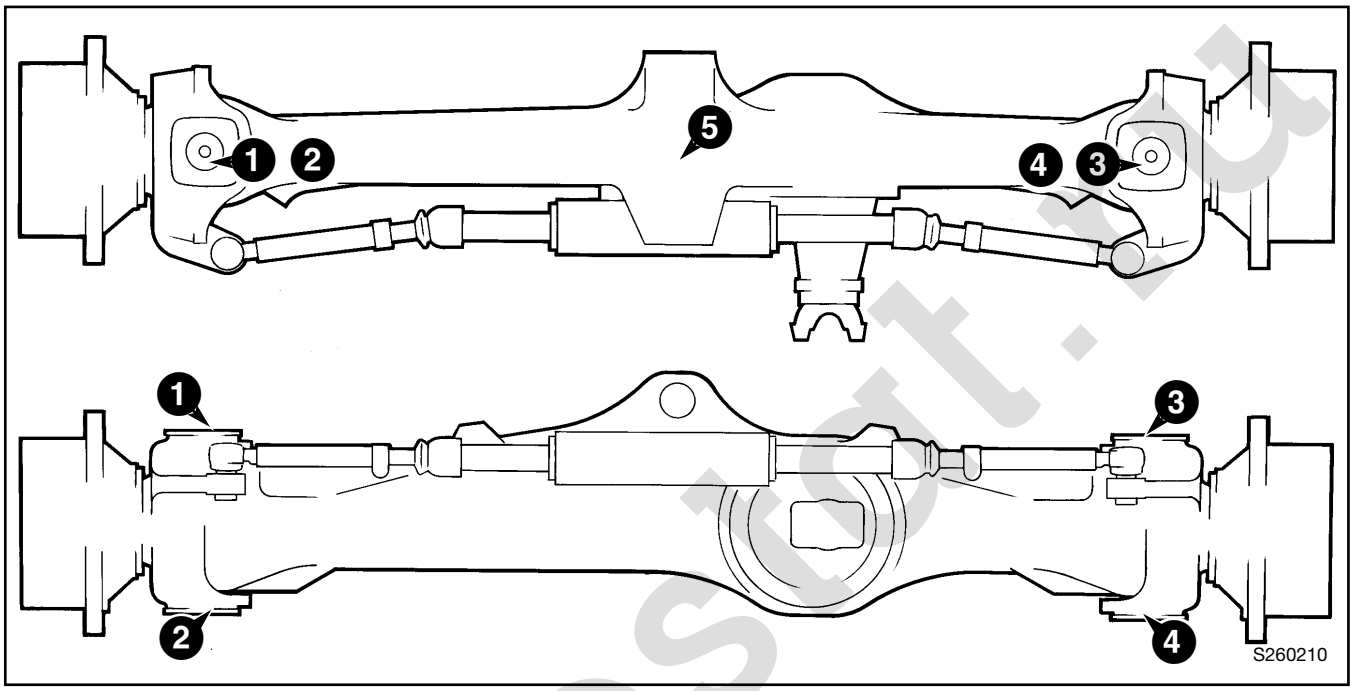

Rear Axle

4 Grease Points

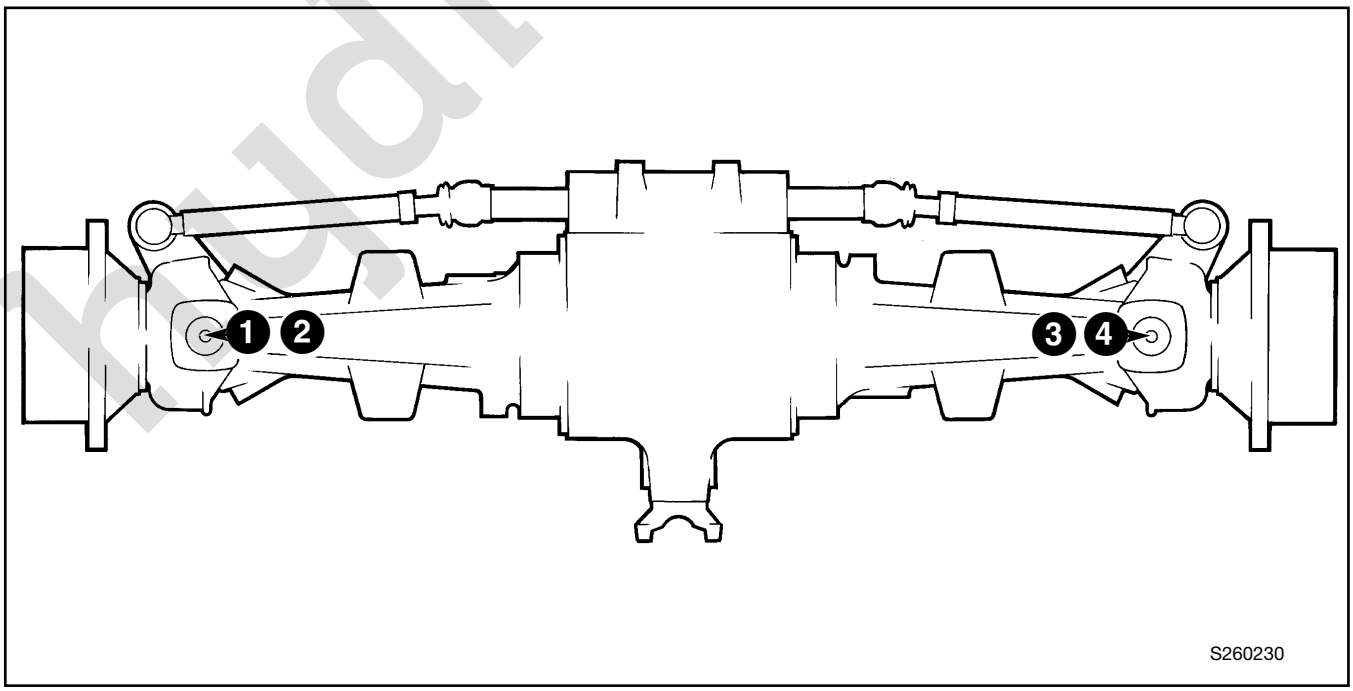

GREASING
(continued)

Driveshafts

Rear Driveshaft
3 Grease Points

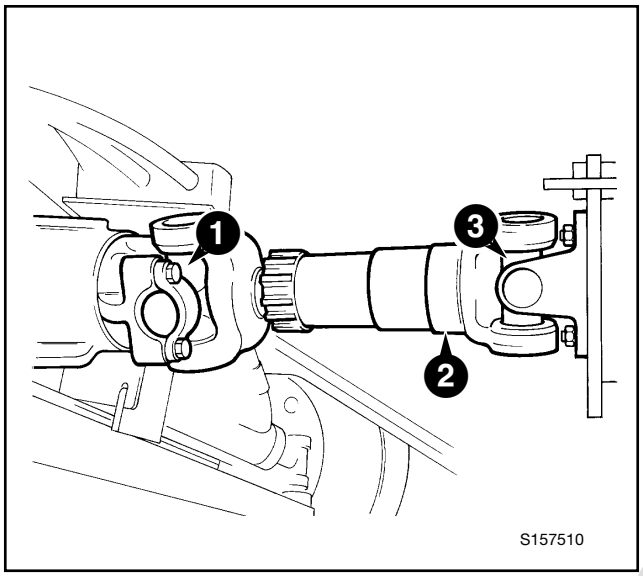

Front Driveshaft
3 Grease Points

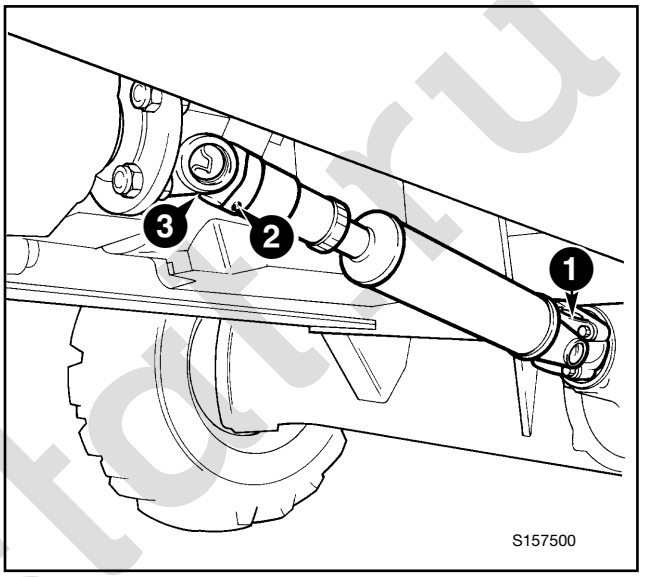

Multi-Purpose Shovel

3 grease points each end -
Total 6 Grease Points

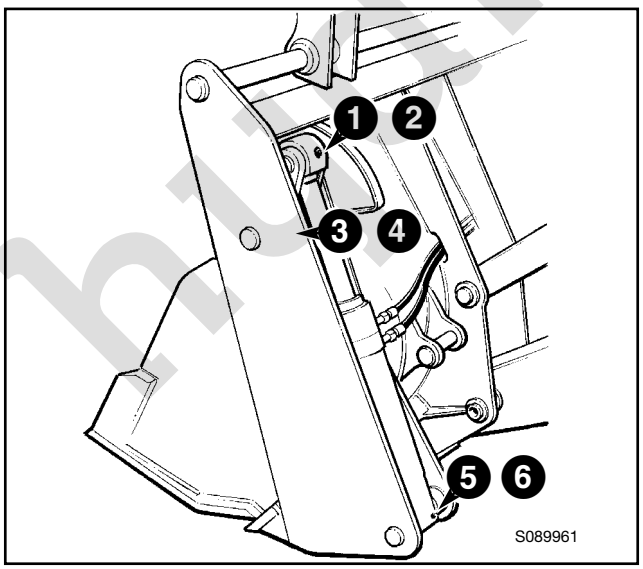

Kingpost

9 Grease Points

Note: Figure shows a centremount kingpost, greasing is same for sideshift kingpost.

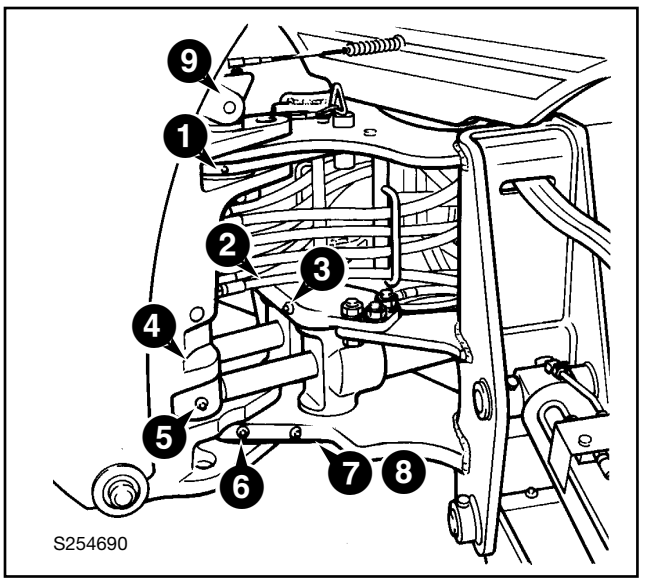

GREASING
(continued)

Loader Quick-Hitch (Hydraulic)

6 Grease Points

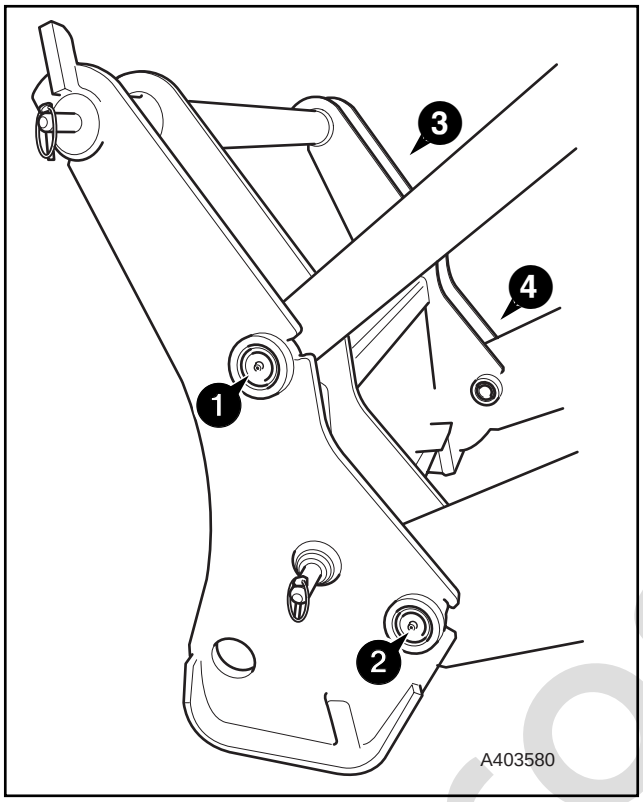

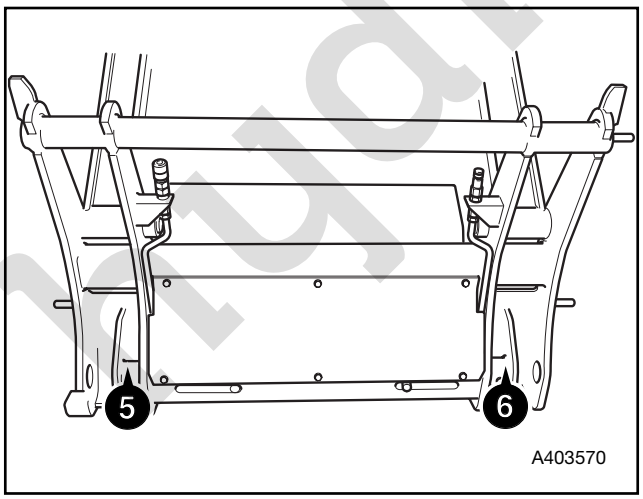

Backhoe Quick-Hitch (Hydraulic)

⚠ CAUTION

Waxoyl contains turpentine substitute, which is inflammable. Keep flames away when applying Waxoyl. Waxoyl can take a few weeks to dry completely. Keep flames away during the drying period.

Do not weld near the affected area during the drying period. Take the same precautions as for oil to keep Waxoyl off your skin. Do not breathe the fumes. Apply in a well-ventilated area.
5-3-1-9

Coat the slide **A** with **Waxoyl**.

4 Grease Points

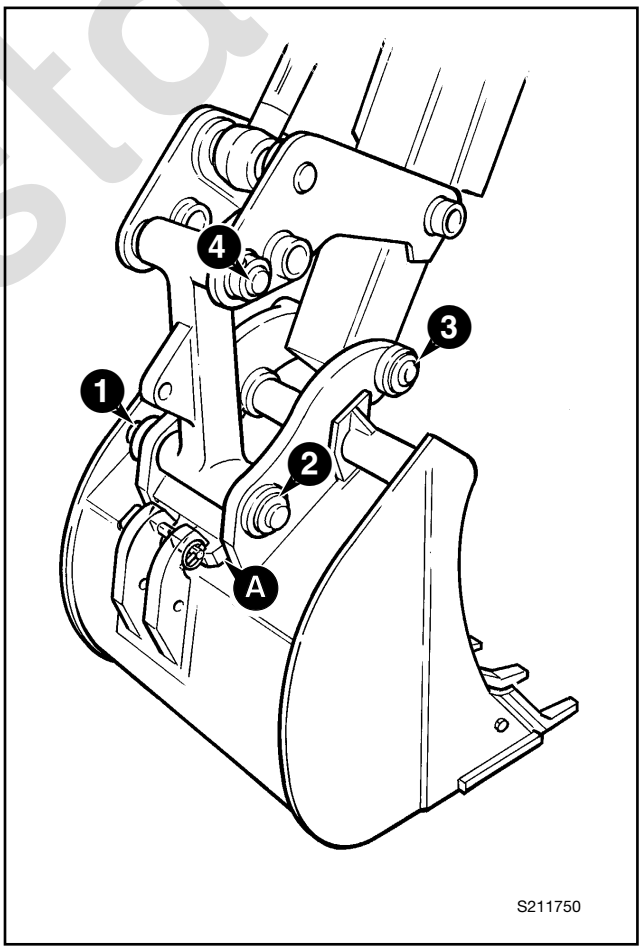

GREASING (continued)

Hydraulic Pump Driveshaft

1 Grease Point

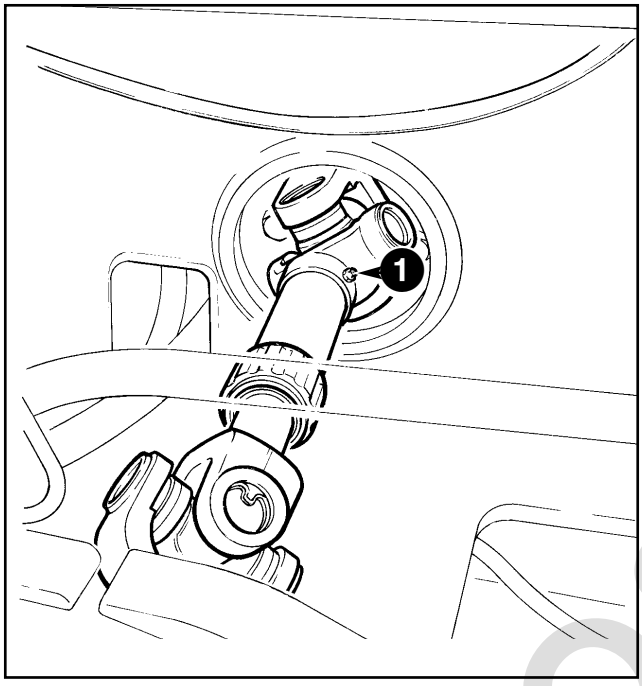

TYRES AND WHEELS

Tyre Inflation

These instructions are for adding air to a tyre which is already inflated. If the tyre has lost all its air pressure, call in a qualified tyre mechanic. The tyre mechanic should use a tyre inflation cage and the correct equipment to do the job.

If using a puncture sealant, refer to the manufactures instructions for correct use an d limitations, restict the speed limit to 10 kph (6 mph).

⚠ WARNING

An exploding tyre can kill, inflated tyres can explode if overheated. Do not cut or weld the rims. Use a tyre/wheel specialist for all repair work.
2-3-2-7

1 **Prepare the Wheel**
Before you add air to the tyre, make sure it is correctly fitted on the machine or installed in a tyre inflation cage.

2 **Prepare the Equipment**
Use only an air supply system which includes a pressure regulator. Set the regulator no higher than 1.38 bar (20 psi) above the recommended tyre pressure. See ***Tyre Sizes and Pressures*** *(SPECIFICATION Section)* for recommended tyres and pressures for your machine.

Use an air hose fitted with a self-locking air chuck and remote shut-off valve.

3 **Add the Air**
Make sure that the air hose is correctly connected to the tyre valve. Clear other people from the area. Stand behind the tread of the tyre while adding the air.

Inflate the tyre to the recommended pressure. Do not over-inflate.

TYRES AND WHEELS (continued)

Using the Tyre Inflator

On the rear right hand fender of the machine there is an electrically operated compressor.

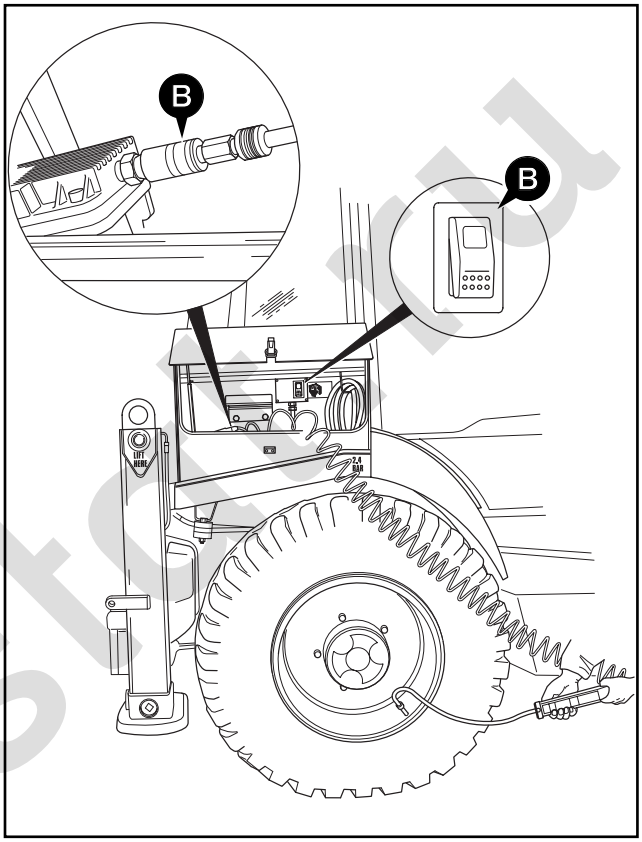

1 Switch OFF the engine and remove the starter key, open pannier panel and lock the support strut.

2 Connect the air hose to the quick connect fitting **A**.

3 Use switch **B** to turn the compressor ON. With the compressor on, the refuel pump is inoperative.

⚠ CAUTION

After prolonged use the compressor casing can get hot, keep hands and equipment away until the compressor has cooled.

4 Make sure that the air hose is correctly connected to the tyre valve. Clear other people from the area. Stand behind the tread of the tyre while adding the air.

Inflate the tyre to the recommended pressure. Do not over-inflate.

Checking the Wheel Nut Torques

On new machines, and whenever a wheel has been removed, check the wheel nut torques every two hours until they stay correct.

Every day, before starting work, check that the wheel nuts are tight.

The correct torques are shown in the table below.

	Nm	lbf ft
Front -	680	500
Rear -	680	500

⚠ WARNING

If, for whatever reason, a wheel stud is renewed, all the studs for that wheel must be changed as a set, since the remaining studs may have been damaged.

2-3-2-8

BRAKES

Parking Brake Adjustment

If you are not confident or technically qualified to carry out this procedure, contact your JCB Dealer.

⚠ CAUTION

The parking brake must not be used to slow the machine from travelling speed, except in an emergency, otherwise the efficiency of the brake will be reduced.
Whenever the parking brake has been used in an emergency, always renew both brake pads.
4-2-1-1/2

⚠ WARNING

Before adjusting the parking brake, make sure that the machine is on level ground. Put chocks each side of all four wheels. Disconnect the battery so that the engine cannot be started. If you do not take these precautions the machine could run over you.
2-3-2-4

The parking brake should be fully engaged when the lever is vertical. The parking brake indicator light should light when the brake is engaged with the forward/reverse lever away from neutral (starter switch at IGN).

⚠ WARNING

Over adjustment of the parking brake could result in the parking brake not fully releasing
0011

1 Disengage the parking brake (lever horizontal).

2 Turn handle grip **E** clockwise, half a turn.

3 Test the parking brake, see ***Testing the Parking Brake*** *in OPERATION Section*.

4 If the brake fails the test, repeat steps **2** and **3**. If there is no more adjustment and pin **F** is at the end of its travel get the brake checked by your JCB Dealer.

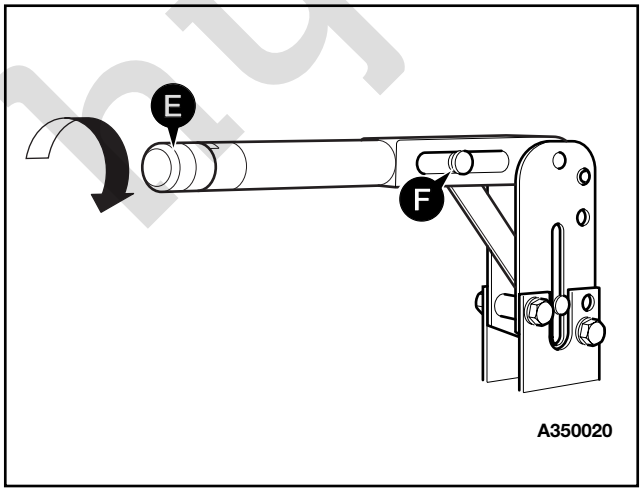

Checking the Foot Brake Fluid Level

⚠ WARNING

Faulty brakes can kill. If you have to add oil to the brake reservoir regularly get the brake system checked by your JCB Dealer. Do not use the machine until the fault has been put right.
2-3-2-5

1 Park the machine on firm level ground, engage the parking brake and set the transmission to neutral. Raise and chock the loader arms. Lower the backhoe to the ground and stop the engine.

2 Remove the reservoir cap **A** and check the level. The MAX and MIN marks are marked on the side of the reservoir **B**. If necessary, add fluid as in Step 3.

If the level has fallen below the MIN mark, get the system checked by your JCB Dealer.

⚠ WARNING

Using incorrect brake fluid could damage the system. See *Service Capacities and Lubricants* in MAINTENANCE Section. The fluid can harm your skin. Wear rubber gloves. Cover cuts and grazes.
4-3-2-3

3 If required, carefully pour the recommended fluid (DO NOT USE ORDINARY BRAKE FLUID) until it reaches the correct level.

4 Refit the reservoir cap. Wipe up any spillage.

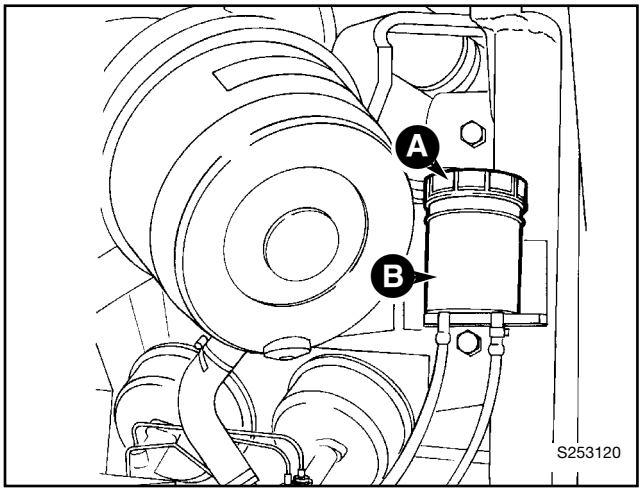

ENGINE AIR FILTER

Changing the Elements

⚠ CAUTION

The outer element must be renewed immediately if the warning light on the instrument panel illuminates.
2-3-3-1

Note: Do not attempt to wash or clean the elements - they must only be renewed.

Note: Do not run the engine with the dust valve **J** removed.

Note: A new inner element must be fitted at least every third time the outer element is changed. As a reminder, mark the inner element with a felt tipped pen each time the outer element is changed.

1 Stop the engine.

2 Remove the engine side panel (left hand side).

3 If changing the inner element, cover the end of the hose to prevent rain and dirt from getting into the engine.

4 Depress clips **B** and lift off cover **C**. Remove outer element **D**. Take care not to tap or knock the element. If the inner element is to be changed, lift up pulls **E** and remove inner element **F**.

5 Clean inside the canister **H**, cover **C** and dust valve **J**.

6 Insert the new elements into the canister, pushing them firmly in so that seals **G** and **K** are fully seated. Fit cover **C** with dust valve **J** at the bottom. Push the cover firmly into position and make sure it is secured by clips **B**.

7 Refit the induction hose to stub pipe **A**. Make sure that the wire is connected to the **Air Filter Blocked** switch.

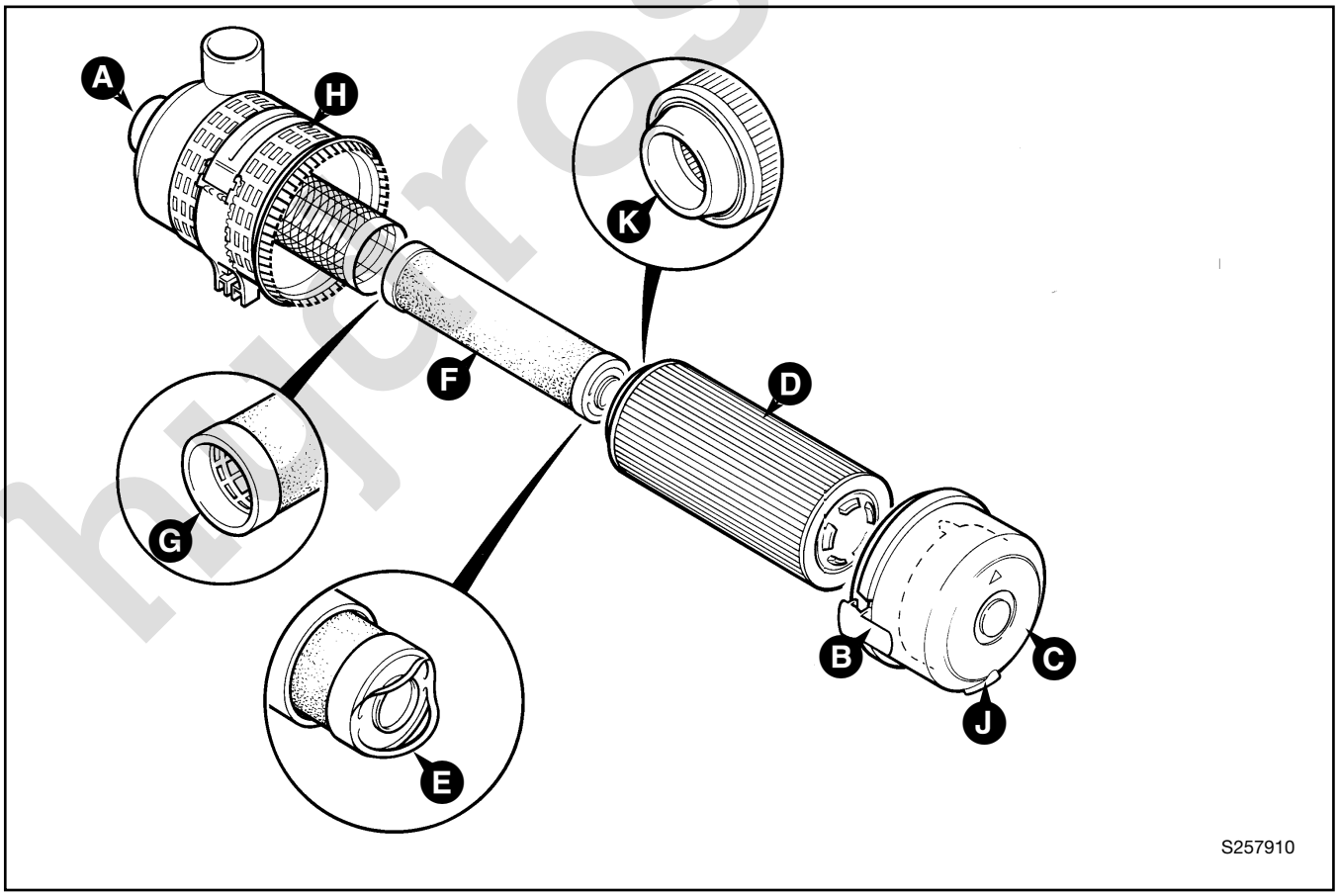

8642 - 1

ENGINE OIL AND FILTER

Checking the Oil Level

1 Make sure the park brake is engaged and the transmission set to neutral. If the loader arms are raised, lower them under their own weight, or fit the safety strut.

2 Remove the dipstick access panel.

3 Check that the oil level is between the two marks on the dipstick **A**. Add oil if necessary, through filler **B**. Make sure that the dipstick and filler cap are fully inserted and tightened.

Changing the Oil and Filter

1 Drain the oil when the engine is warm as contaminants held in suspension will then be drained with the oil. Park the machine on firm ground.

⚠ WARNING

Make the machine safe before getting beneath it. Lower the attachments to the ground; engage the parking brake; remove the starter key, disconnect the battery.

2-3-2-2

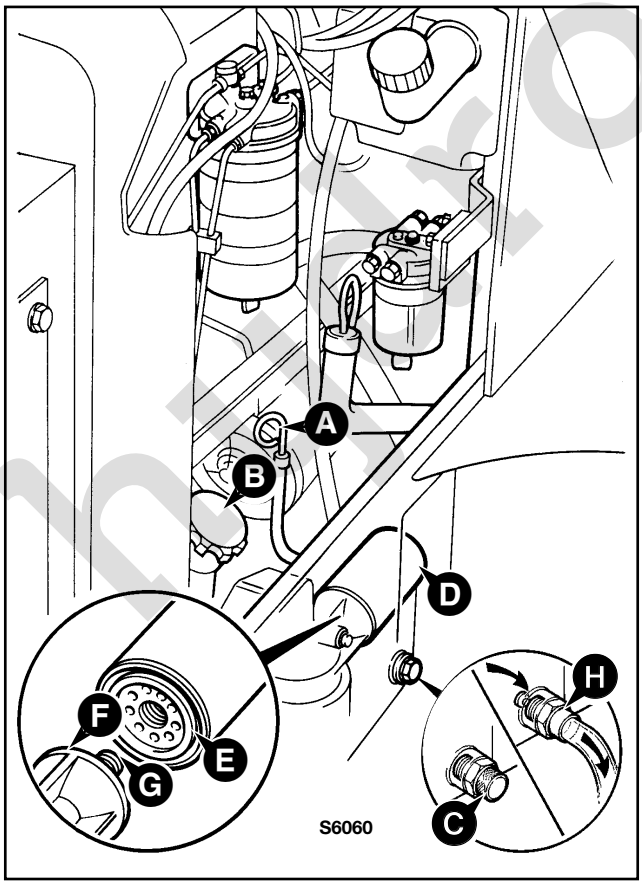

8642 - 1

2 Make sure the park brake is engaged and the transmission set to neutral. If the loader arms are raised, lower them under their own weight, or fit the safety strut.

3 Remove the dipstick access panel.

4 Drain the oil**:**

⚠ CAUTION

Oil will gush from the hole when the drain plug is removed. Hot oil and engine components can burn you. Keep to one side when you remove the plug.

13-3-1-15

- **a** Place a container that can hold at least 12 litres (3 gal) beneath the engine (to catch the oil).
- **b** Remove dust cap **C** from the sump drain port, attach the drain tube assembly **H**. With the free end of the tube in the oil container, screw in the drain tube assembly to open the valve.
- **c** When all the oil has drained, unscrew the drain tube assembly and fit the dust cap **C**.

5 Change the filter**:**

- **a** Unscrew the filter canister **D**. Remember that it will be full of oil.
- **b** Check that adapter **G** is secure.
- **c** Clean the filter head **F**.
- **d** Add clean engine lubricating oil to the new filter canister. Allow enough time for the oil to pass through the filter element.
- **e** Smear the seal **E** on the new filter with oil. Screw in the new filter canister - hand tight only.

6 Fill the engine to the max mark on the dipstick with new oil through the filler. See the chart at the end of the MAINTENANCE section for recommended oil grades. Wipe off any spilt oil. Check for leaks. Make sure the filler cap is correctly refitted.

7 Start the engine, run at idle rpm until the engine oil low pressure light is extinguished.

8 Switch engine OFF, check the oil level.

ENGINE COOLING SYSTEM

Checking the Coolant

⚠ WARNING

The cooling system is pressurised when the coolant is hot. Hot coolant will burn you. Make sure the engine is cool before checking the coolant level or draining the system.
2-3-3-3

1 Park the machine on level ground. Engage the parking brake. Stop the engine and let it cool down.

2 The coolant level should be between the COLD/MIN and the HOT/MAX marks on coolant reservoir **B**. Fill with pre-mixed water/antifreeze if necessary.

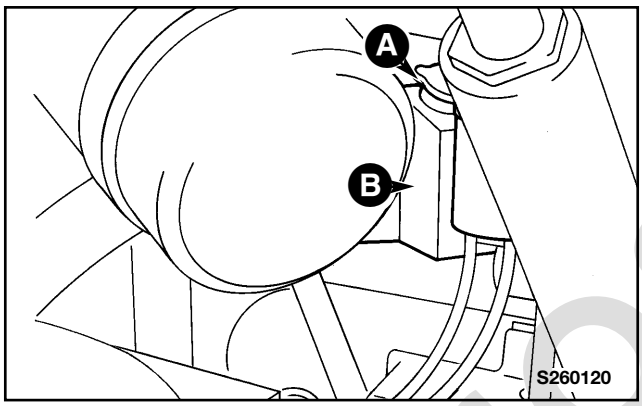

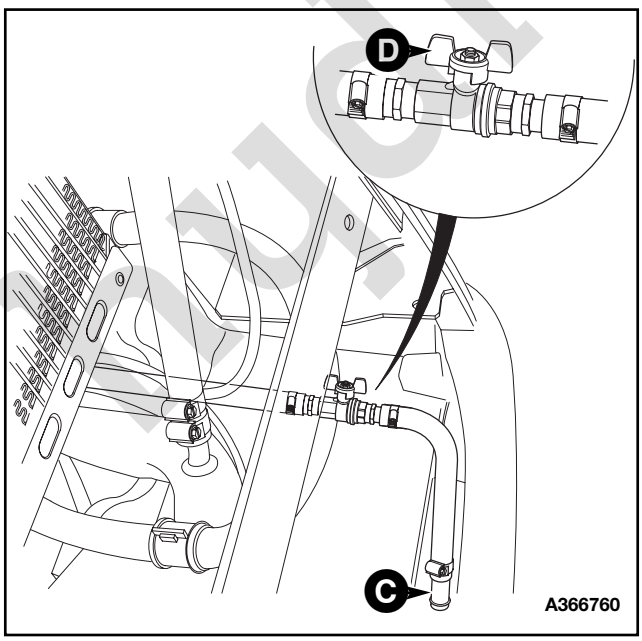

Changing the Coolant

⚠ WARNING

The cooling system is pressurised when the coolant is hot. Hot coolant will burn you. Make sure the engine is cool before checking the coolant level or draining the system.
2-3-3-3

1 Park the machine on level ground. Engage the parking brake. Stop the engine and let it cool down.

2 Carefully loosen cap **A**. Let any pressure escape. Remove the cap.

⚠ CAUTION

Keep your face away from the drain hole when removing the drain plug.
2-3-3-4

3 Attach a drain tube to drain extension **C**. With the free end of the tube in a container, open the drain valve **D**.

4 When all the coolant has drained, flush the system using clean water.

5 Shut the drain valve **D** and remove drain tube.

6 Use the necessary mix of clean, soft water and antifreeze. See ***Coolant Mixtures*** *(MAINTENANCE section).* Fill to the COLD/MIN level on coolant reservoir **B.**

7 Start the engine and run at idle to circulate the coolant, top up with coolant as necessary.

8 Refit the filler cap. Make sure it is tight.

9 Run the engine for a while, to raise the coolant to working temperature and pressure. Stop the engine. Check for leaks.

Note: Make sure the cab heater control is in the hot position. This will ensure the coolant mixture circulates through the entire cooling system.

ENGINE COOLING SYSTEM (continued)

Adjusting the Fan Belt

⚠ WARNING

Make sure the engine cannot be started. Disconnect the battery before doing this job.

2-3-3-5

1 Park the machine on firm level ground, engage the parking brake and set the transmission to neutral. Raise and block the loader arms. Lower the backhoe to the ground and stop the engine.

2 Loosen pivot fastening bolts **A** and **B**. Loosen adjustment link fastening bolts **C** and **D**.

3 Position the alternator so that there is 10 mm (3/8 in) slack at point **X**.

4 Tighten bolts **C** and **D**, then bolts **A** and **B.**

Note: If a new belt is fitted, the belt tension must be checked again after the first 20 hours of operation.

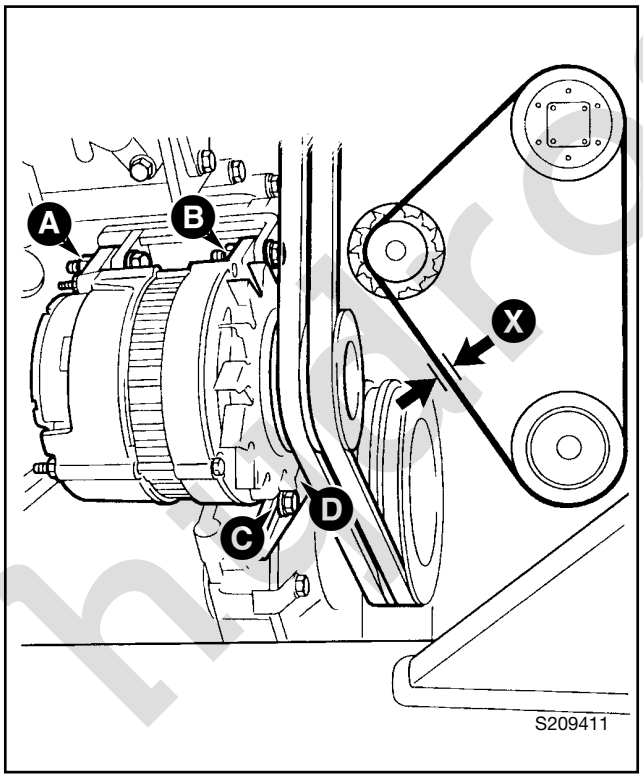

Cleaning the Cab Heater Filter

1 Park the machine on firm level ground, engage the parking brake and set the transmission to neutral. Lower the attachments to the ground and stop the engine.

2 Remove the panel retaining screw and then remove the panel **E.**

3 Remove the filter cover retaining screws and then remove the filter cover **F.**

4 Knock loose dust off the filter **G**. Carefully blow compressed air through all the folds of the filter, blow in the opposite direction to the arrows marked on the filter.

Note: The compressed air must be set at a pressure no greater than 7 bar (100 lb/in^2).

5 Refit the filter cover **F** and panel **E**, secure with the retaining screw.

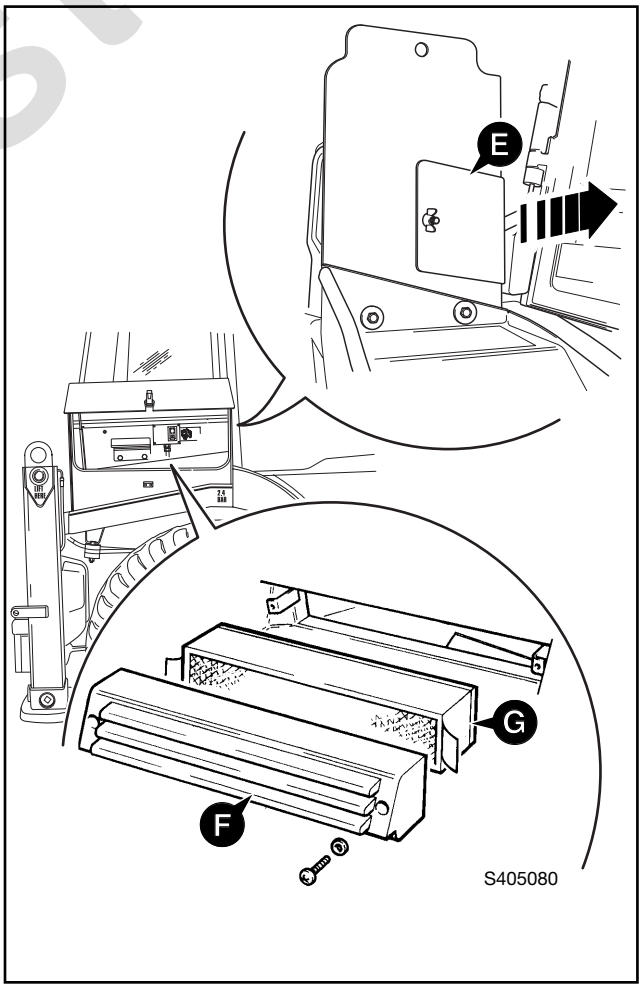

FUEL SYSTEM

Types of Fuel

Use good quality diesel fuel to get the correct power and performance from your engine. The recommended fuel specification for engines is given below.

Cetane Number:	45(minimum)
Viscosity:	2.5/4.5 centistokes at 40 °C (104 °F)
Density:	0.835/0.855 kg/litre (0.872/0.904 lb/pint)
Sulphur:	0.5% of mass (maximum)
Distillation:	85% at 350 °C (662 °F)

Cetane Number
Indicates ignition performance. Fuel with a low cetane number can cause cold start problems and affect combustion.

Viscosity
Is the resistance to flow. If this is outside limits, the engine performance can be affected.

Density
Lower density will reduce engine power. Higher density will increase both engine power and exhaust smoke.

Sulphur
High sulphur content can cause engine wear. (High sulphur fuel is not normally found in North America, Europe or Australia.) If you have to use high sulphur fuel you must also use a highly alkaline engine lubricating oil; or change the normal oil more frequently.

Low sulphur fuels are commonly used throughout the world. These fuels contain fewer lubrication additives. The fuel injection pumps fitted to the engine (with exception of 160TW, Euro 1 engine) are lubricated by the fuel; therefore using low sulphur fuel may, in the long term, affect the pump.

If you have to use low sulphur fuel you are advised to use a lubrication additive as recommended by your fuel supplier.

Distillation
This indicates the mixture of different hydrocarbons in the fuel. A high ratio of lightweight hydrocarbons can affect the combustion characteristics.

Fuel Standards

Consult your fuel supplier, JCB distributor about the suitability of any fuel you are unsure of.

Low Temperature Fuels

Special winter fuels may be available for engine operation at temperatures below 0°C (32°F). These fuels have a lower viscosity. They also limit wax formation in the fuel at low temperatures. (Wax forming in the fuel can stop the fuel flowing through the filter.)

Flow improvers may also be available. These can be added to the fuel to reduce wax formation.

Fatty Acid Methyl Ester Fuels As A Replacement for Diesel Fuels

Fuel resources such as Rape Methyl Ester and Soybean Methyl Ester, collectively known as Fatty Acid Methyl Esters are being used as alternatives and extenders for mineral oil.

Fatty Acid Methyl Esters must conform to certain standards to be of acceptable quality, just as mineral oils do at present.

Consult your JCB distributor for advice about the use of Fatty Acid Methyl Ester fuels, as improper application may impair engine performance.

Petrol

⚠ WARNING

Do not use petrol in this machine. Do not mix petrol with the diesel fuel; in storage tanks the petrol will rise to the top and form flammable vapours.
INT-3-1-6

Advice
If you have to use non-standard fuels, contact your JCB distributor for advice on engine adjustments and oil change periods.

⚠ WARNING

Diesel fuel is flammable; keep naked flames away from the machine. Do not smoke while refuelling the machine or working on the engine. Do not refuel with the engine running. There could be a fire and injury if you do not follow these precautions.
INT-3-2-2

FUEL SYSTEM (continued)

Filling the Tank

⚠ WARNING

Lower the loader arms and switch off the engine before refuelling. Do not permit operation of the machine controls while refuelling.
2-3-3-9

At the end of every working day, fill the tank with the correct type of fuel. This will prevent overnight condensation from developing in the fuel.

The cap incorporates a side mounted barrel lock that is operated by the ignition/door key. Once the key has been removed, the cap will simply rotate on the filler neck. To remove the cap from the filler neck, the key must be inserted and the cap unlocked.

There is a strainer fitted in the filler neck, if dirty, clean. A damaged strainer must be replaced.

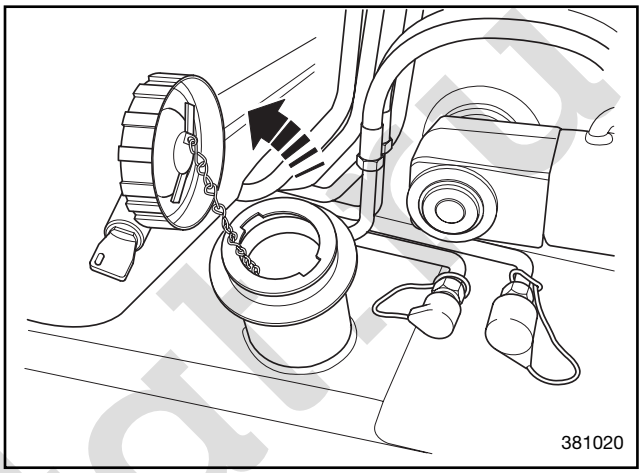

Fuel Transfer Pump

⚠ WARNING

When using the fuel transfer pump, do not use a fuel with a flash point below 37ºC (100ºF). Do not let the pump run dry for more than 30 seconds. The maximum head height is 6.0m (20ft).
084

To refuel the tank from a drum a fuel transfer pump is fitted in the right hand pannier.

1 Position the machine or the drum/container so that the inlet hose will reach the drum.

2 Check the amount of fuel required to fill the tank, switch off the ignition.

Note: The tank capacity is 150 litres and the pump delivers 35 litres a minute, it will take 4 minutes (approx) to fill the tank from empty.

3 Check the drum/container is the correct grade fuel as specified, see ***Types of Fuel***.

4 To allow the tank to vent, remove the fuel cap.

5 Check the inlet hose filter **A** is fitted and clean, place in drum, operate and hold pump switch **B** to transfer fuel into the machine. Release switch **B** when the required amount of fuel has been transferred.

6 Remove inlet hose from drum/container and coil neatly on stowage bracket.

7 Fit and lock the filler cap.

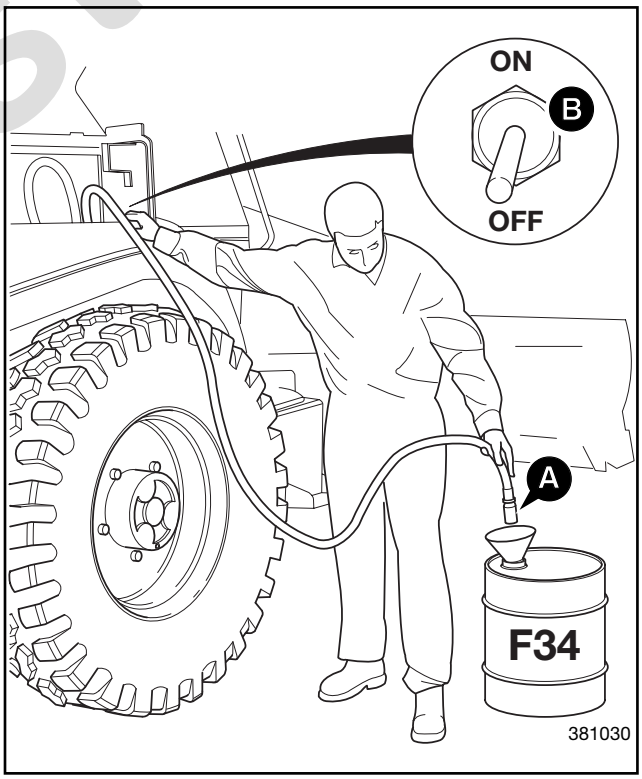

FUEL SYSTEM
(continued)

Draining the Tank

1 Place a container below the drain tap of sufficient size to collect the contents of the tank, see ***Service Capacities and Lubricants***.

2 Remove dust cap **C** from the sump drain tube assembly **D**. With the free end of the tube in the oil container, screw in the drain tube assembly to open the valve. When all the oil has drained, unscrew the drain tube assembly and fit dust cap **C**.

Draining the Filter

1 Park the machine on firm level ground, engage the parking brake and set the transmission to neutral. Raise and block the loader arms. Lower the backhoe to the ground and stop the engine.

2 Drain off any water in the element **A** by turning tap **B**

Changing the Filter Element

1 Park the machine on firm level ground, engage the parking brake and set the transmission to neutral. Raise and block the loader arms. Lower the backhoe to the ground and stop the engine.

2 Unscrew the filter element **A**. The element is hand tight but may require a strap wrench to remove. The filter will be full of fuel.

3 To assist with bleeding, fill the new filter element with fuel before fitting. Install new element **A** hand tight only. Check for leaks.

4 Bleed the System.

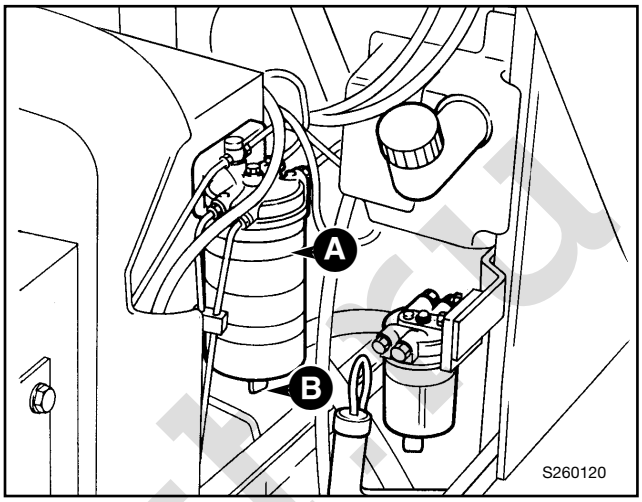

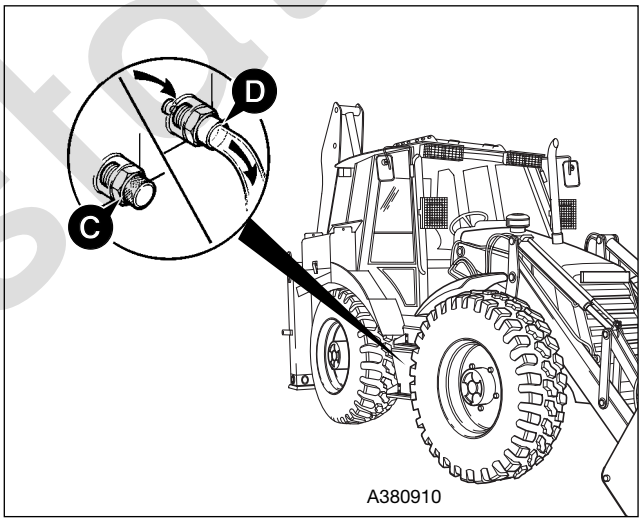

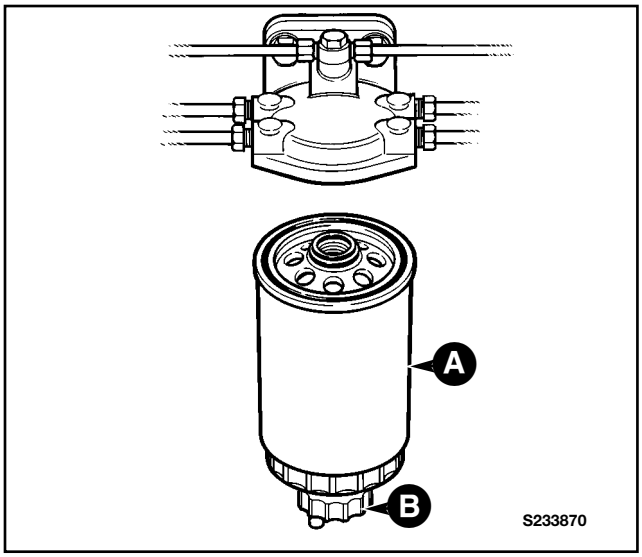

FUEL SYSTEM (continued)

Draining the Sediment Bowl

1 Park the machine on firm level ground, engage the parking brake and set the transmission to neutral. Raise and block the loader arms. Lower the backhoe to the ground and stop the engine.

2 Look in bowl **A**. If it contains sediment, do Steps 3 to 6. If there is water but no sediment, drain off the water by opening tap **B**. Make sure tap **B** is turned off and secure.

3 Support bowl **A** ; unscrew nut **C**. Remove the bowl.

4 Wash the bowl. Use clean fuel.

5 Refit the bowl, make sure gasket is seated correctly.

6 Bleed the System.

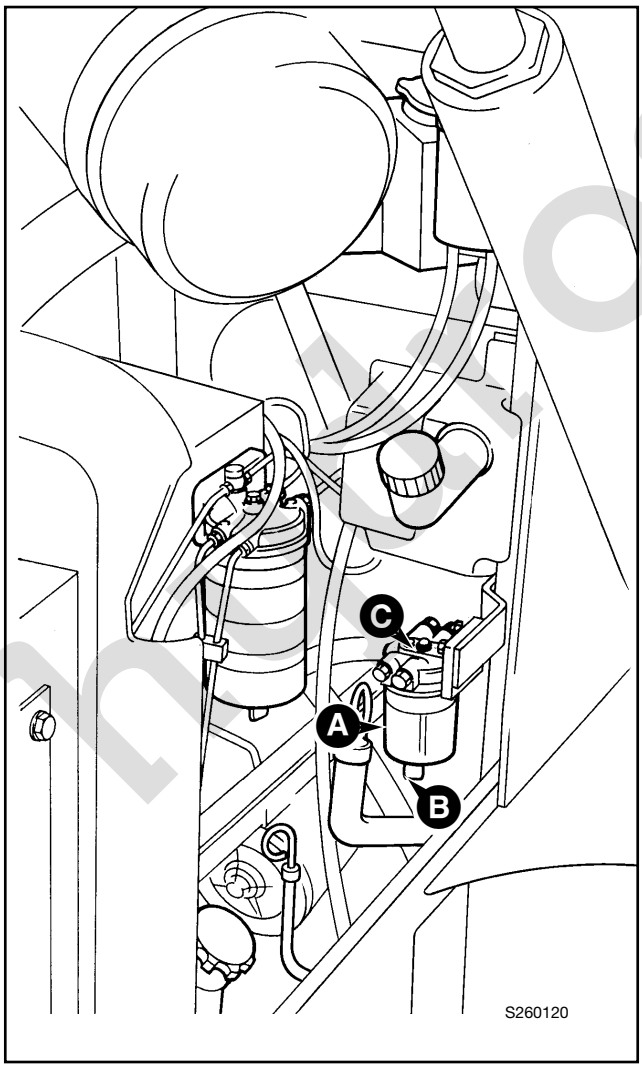

Bleed the System

⚠ CAUTION

Running the engine with air in the system could damage the fuel injection pump. After maintenance, remove air from the system as detailed below.

2-3-3-7

1 Park the machine on firm level ground, engage the parking brake and set the transmission to neutral. Raise and block the loader arms. Lower the backhoe to the ground and stop the engine.

2 Set the starter key to the IGN position.

⚠ WARNING

Hot oil and engine components can burn you. Make sure the engine is cool before doing this job.

2-3-3-2

3 Operate the fuel lift pump priming lever **X** slowly, for approximately two minutes. The engine is now ready to start. If the engine runs smoothly for a short time, and then begins to run roughly or stops, check again for air in the fuel system. Check all seals and connections, especially in the low pressure side of the system.

Note: If no fuel is moved when the fuel lift pump priming lever **X** is operated, then the pump diaphragm may have rested in a 'maximum lift' position. To move the diaphragm, use the starter key to turn the engine, then try the priming lever again.

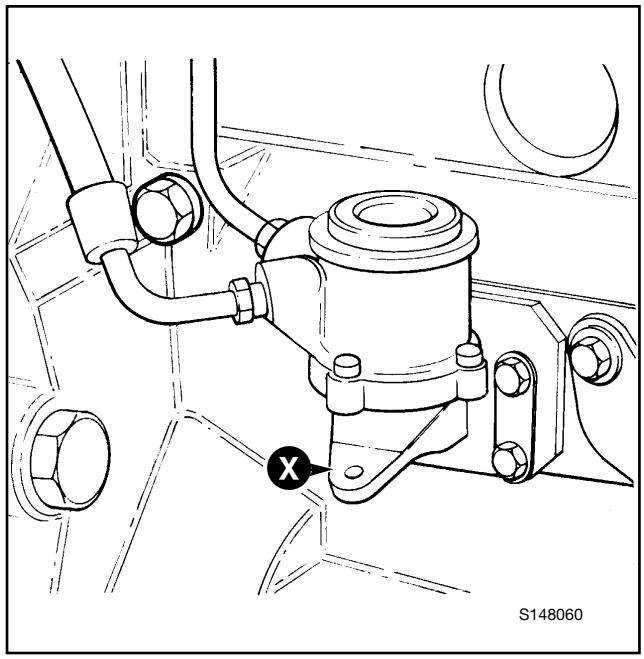

POWERSHIFT TRANSMISSION

Checking the Oil Level

⚠ WARNING

Raised loader arms can drop suddenly and cause serious injury. Before working under raised loader arms, fit the loader arm safety strut.
2-1-1-6

1 With the engine stopped, fill the transmission to maximum mark on dipstick/filler **A**. Use only the recommended oil.

2 Start and run the engine slowly for a period not exceeding five minutes. This allows the oil to fill filter, pump, torque converter, oil cooler and hoses.

3 Stop the engine, wait approximately 20 seconds. Check the oil level and if required, fill to dipstick level.

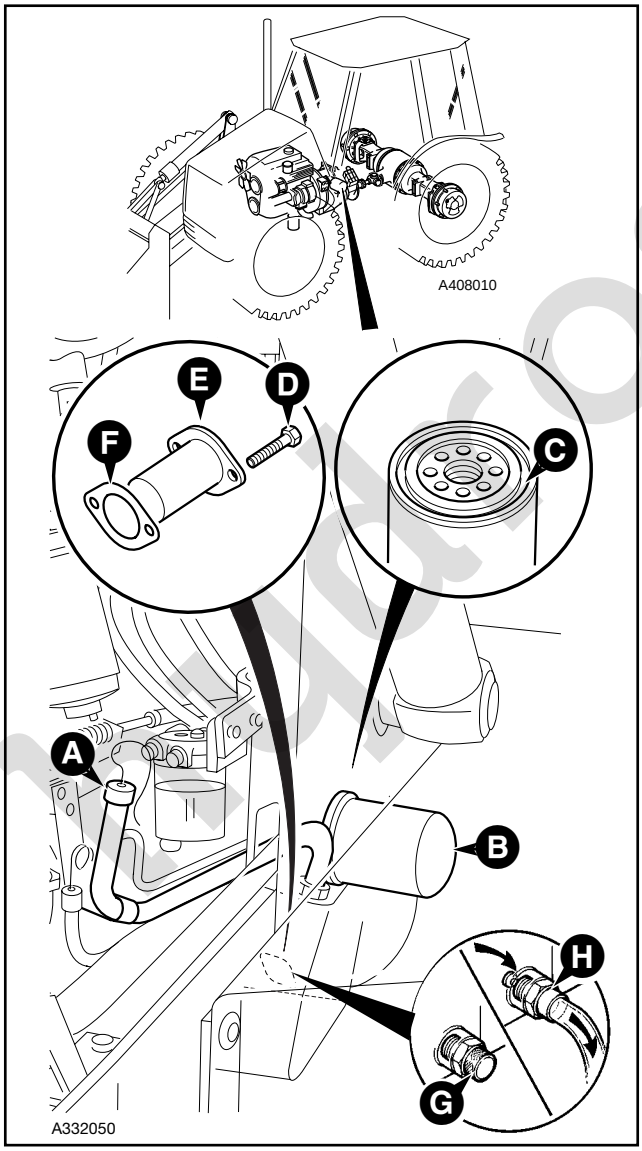

Changing the Oil and Filter

The transmission oil should be drained through the suction strainer aperture to flush out any particles which fall off the strainer during its removal.

⚠ WARNING

Make the machine safe before getting beneath it. Lower the attachments to the ground; engage the parking brake; remove the starter key, disconnect the battery.
2-3-2-2

1 Park the machine on level ground. Engage the parking brake. Lower the attachments to the ground. Stop the engine. Remove the starter key. Disconnect the battery.

⚠ CAUTION

When the strainer is removed, oil will gush out. Keep to one side when you remove the strainer.
2-3-4-1

2 Place a container that can hold at least 14.75 litres (3.3 gal) beneath the machine. Remove dust cap **G** from the sump drain tube assembly **H**. With the free end of the tube in the oil container, screw in the drain tube assembly to open the valve. When all the oil has drained, unscrew the drain tube assembly and fit dust cap **G**.

4 Remove bolts **D**. Pull out strainer **E** and its gasket **F** as shown.

5 Clean the strainer with a suitable solvent. Follow the solvent manufacturer's instructions on safety.

6 Fit the strainer **E** and a new gasket **F**. Apply JCB Threadlocker and Sealer to bolts **D** before fitting and tightening them. Torque tighten the bolts to 10 Nm (7 lbf ft).

7 Unscrew and remove the filter **B**. Fit the new filter:

- **a** Smear seal **C** with transmission oil.
- **b** Screw the filter on until it just contacts the filter head.
- **c** Turn the filter at least another 3/4 of a turn.

8 Fill the system with new oil through the dipstick/filler **A**. Do not fill past the top mark on the dipstick.

Note: Fit only a genuine supplied JCB filter, otherwise damage to the system may be incurred through contamination.

HYDRAULIC SYSTEM

Checking the Fluid Level

⚠ WARNING

Fine jets of hydraulic fluid at high pressure can penetrate the skin. Do not use your fingers to check for hydraulic fluid leaks. Do not put your face close to suspected leaks. Hold a piece of cardboard close to suspected leaks and then inspect the cardboard for signs of hydraulic fluid. If hydraulic fluid penetrates your skin, get medical help immediately.

INT-3-1-10/1

1 Position the machine on level ground. Set the loader shovel on the ground. Raise the boom, swing in the dipper and close the bucket. Stop the engine. Remove the starter key.

2 Look at the fluid level in the sight glass **A**. The level should be at the red mark (or above).

⚠ CAUTION

If the fluid in the tube appears cloudy, then water or air has entered the system. The hydraulic pump could be severely damaged if the machine is operated. Contact your JCB distributor immediately.

2-3-4-3

3 If the oil level is low, remove filler cap **B** and replenish with recommended hydraulic oil as required. There is a strainer fitted in the filler neck, if dirty, clean. A damaged strainer must be replaced.

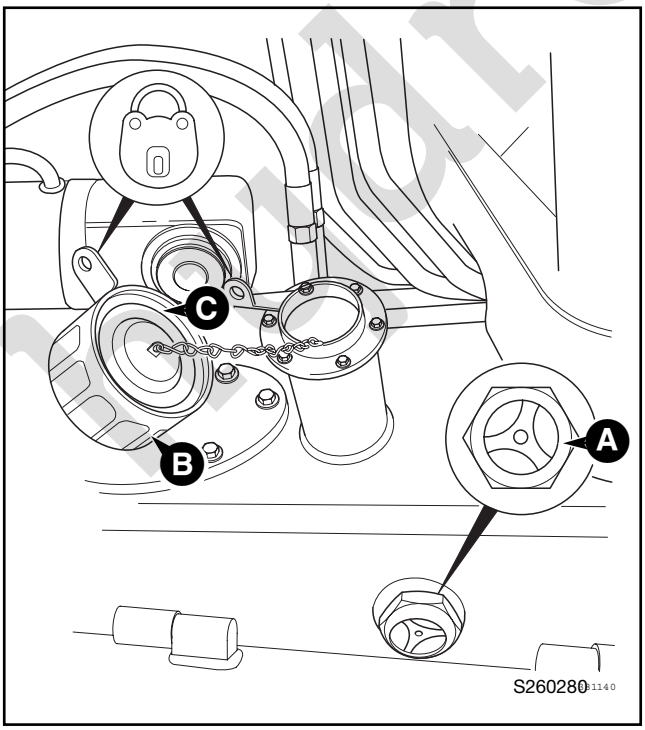

Hydraulic Tank Cap

The hydraulic tank breather (and filter) forms an integral part of the hydraulic tank cap **B**. Replace the cap (and breather filter) with a new one at the recommended interval, see ***Service Schedules***.

It is important to note that seal **C** must be in good condition and correctly installed in the cap.

There is a strainer fitted in the filler neck, if dirty, clean. A damaged strainer must be replaced.

It is recommended that the filler cap is locked in position.

HYDRAULIC SYSTEM (continued)

Changing the Filter Element

⚠ WARNING

Fine jets of hydraulic fluid at high pressure can penetrate the skin. Do not use your fingers to check for hydraulic fluid leaks. Do not put your face close to suspected leaks. Hold a piece of cardboard close to suspected leaks and then inspect the cardboard for signs of hydraulic fluid. If hydraulic fluid penetrates your skin, get medical help immediately.

INT-3-1-10/1

1 Position the machine on level ground. Roll the loader shovel forward and rest it on the ground. Close the backhoe bucket. Swing in the dipper. Lower the boom until the bucket rests on the ground. Lower the stabilisers to the ground. Stop the engine. Remove the starter key.

2 Remove the element assembly

- **a** Remove screws **A**. Remove the cover plate **B** and gasket **C**, discard the gasket.
- **b** Remove spring **D**.
- **c** Hold handle **E** and pull the element assembly from the hydraulic tank.

3 Remove the element from its canister.

- **a** Hold canister **F**.
- **b** Hold handle **E** and rotate the element **G** 90° anti-clockwise.
- **c** Pull on handle **E**, the element **G** should separate from its canister **F**. Discard the old element.
- **d** Remove and discard seal **H**.
- **e** Clean the inside of canister **F**.

New machines are fitted with a 5 micron filter element which must be replaced at the first 100 service with a 10 micron filter element.

4 Fit the new element.

- **a** Fit a new seal **H**.
- **b** Make sure that seal **J** is fitted in the new element.
- **c** Push the element **G** into its canister **F** and rotate the element 90° to lock it into position. Check that the element has locked into position by pulling on handle **E**.
- **d** Install the element assembly in the hydraulic tank.
- **e** Fit spring **D** and a new gasket **C**.
- **f** Fit cover plate **B** and tighten screws **A** to 21 Nm (15.5 lbf ft).
- **g** Check oil level and replenish as required through filler. Fit and tighten the filler cap as described on previous page.

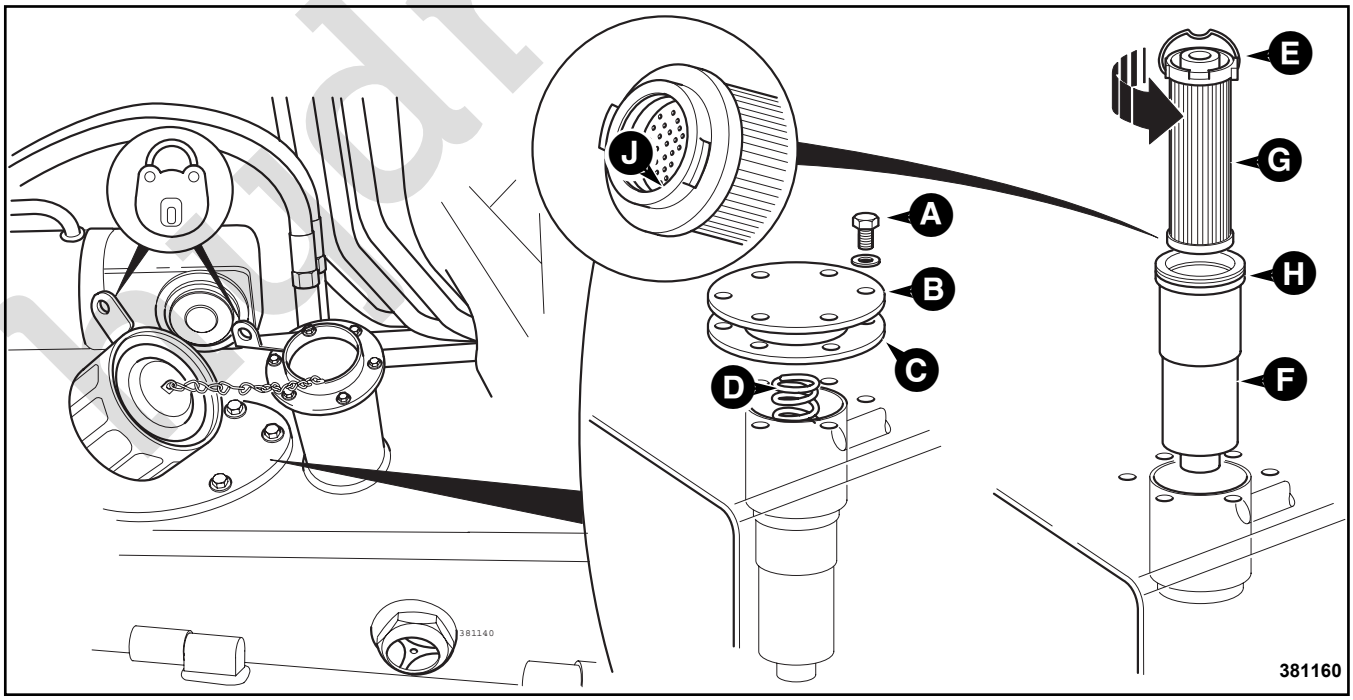

HYDRAULIC SYSTEM (continued)

Draining the Tank

1 Place a container below the drain tap of sufficient size to collect the contents of the tank, see ***Service Capacities and Lubricants***.

2 Remove dust cap **C** from the sump drain tube assembly **D**. With the free end of the tube in the oil container, screw in the drain tube assembly to open the valve. When all the oil has drained, unscrew the drain tube assembly and fit dust cap **C**.

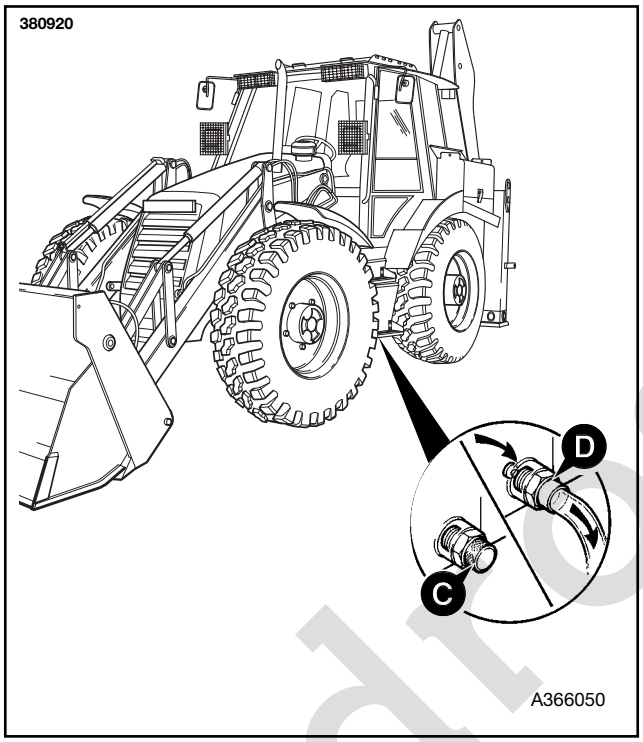

Changing the Suction Strainer

⚠ WARNING

Make the machine safe before getting beneath it. Lower the attachments to the ground; engage the parking brake; remove the starter key, disconnect the battery.

2-3-2-2

1 Position the machine on level ground. Roll the loader shovel forward and rest it on the ground. Close the backhoe bucket. Swing in the dipper. Lower the boom until the bucket rests on the ground. Lower the stabilisers to the ground. Stop the engine. Remove the starter key and disconnect the battery.

2 Remove hydraulic tank filler cap.

3 Drain the tank, ***see Draining the Tank.***

4 Undo clips **A** and disconnect the hydraulic suction pipe.

5 Using a 65mm A/F spanner unscrew suction strainer **B** and discard.

6 Fit a new filter assembly **B**, torque tighten to 15-20 Nm (11-15 lbf ft).

7 Reconnect suction hose. Make sure the clips **A** are positioned 180° apart.

8 Refit drain plug, torque tighten to 100 Nm (74 lbf ft).

9 Refill hydraulic tank, fit and tighten the filler cap, ***see Hydraulic Tank Cap this section.***

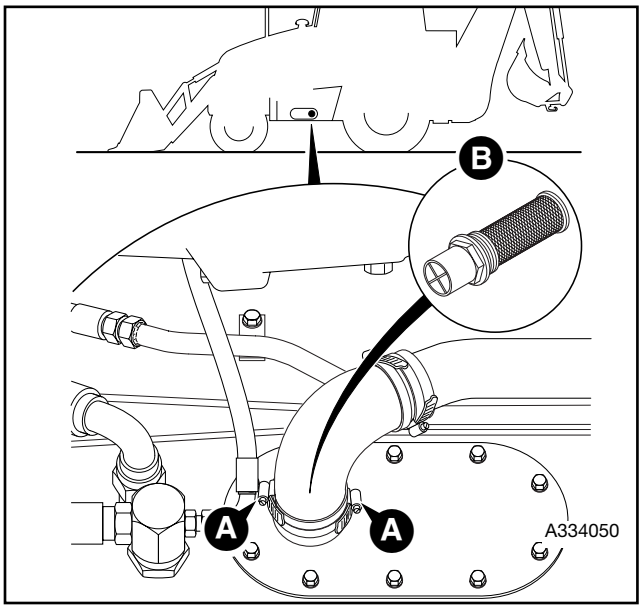

FRONT AXLE

Checking the Differential Oil Level

⚠ WARNING

Make the machine safe before getting beneath it. Lower the attachments to the ground; engage the parking brake; remove the starter key, disconnect the battery.
2-3-2-2

⚠ CAUTION

The axle oil level must be checked with the machine level, otherwise a false indication of the amount of oil in the axle will be given.
16-3-5-3

1 Park the machine on level ground. Engage the parking brake. Set the transmission to neutral. Lower the attachments to the ground. Stop the engine and remove the starter key.

2 Clean the area around fill/level plug **A**, then remove the plug and its sealing washer. Oil should be level with the bottom of the hole. Add recommended oil if necessary.

3 Clean and refit the plug and its washer.

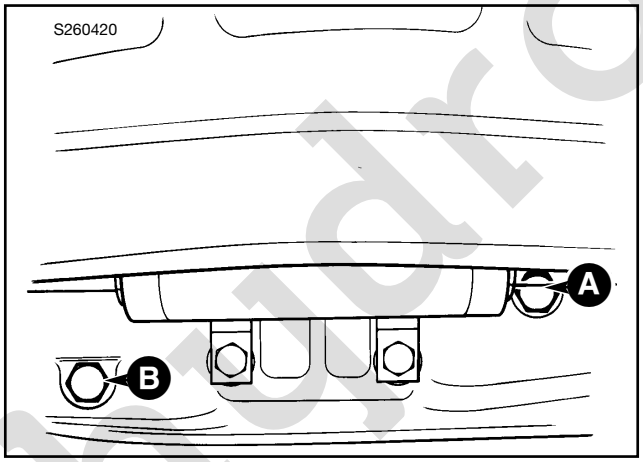

Changing the Differential Oil

⚠ WARNING

Make the machine safe before getting beneath it. Lower the attachments to the ground; engage the parking brake; remove the starter key, disconnect the battery.
2-3-2-2

1 Park the machine on level ground. Engage the parking brake. Set the transmission to neutral. Lower the attachments to the ground. Stop the engine and remove the starter key.

2 Place a container of suitable size beneath plug **B** to catch the oil.

⚠ CAUTION

Oil will gush from the hole when the drain plug is removed. Keep to one side when you remove the plug.
2-3-4-2

Remove the drain plug **B** and its seal. Allow oil to drain out. The drain plug is magnetic. Wipe it clean. (Metallic particles should be carefully removed). Fit drain plug **B** and its washer. Tighten to 79 Nm (60 lbf ft).

3 Fill with recommended oil through fill/level hole **A**. Clean and refit plug **A** and its seal. Tighten to 79 Nm (60 lbf ft).

REAR AXLE

Checking the Differential Oil Level

WARNING

Make the machine safe before getting beneath it. Lower the attachments to the ground; engage the parking brake; remove the starter key, disconnect the battery.

2-3-2-2

CAUTION

The axle oil level must be checked with the machine level, otherwise a false indication of the amount of oil in the axle will be given.

16-3-5-3

1 Park the machine on level ground. Engage the parking brake. Set the transmission to neutral. Lower the attachments to the ground. Stop the engine and remove the starter key.

2 Clean the area around fill/level plug **A**, then remove the plug and its sealing washer. Oil should be level with the bottom of the hole. Add recommended oil if necessary.

3 Clean and refit the plug and its washer.

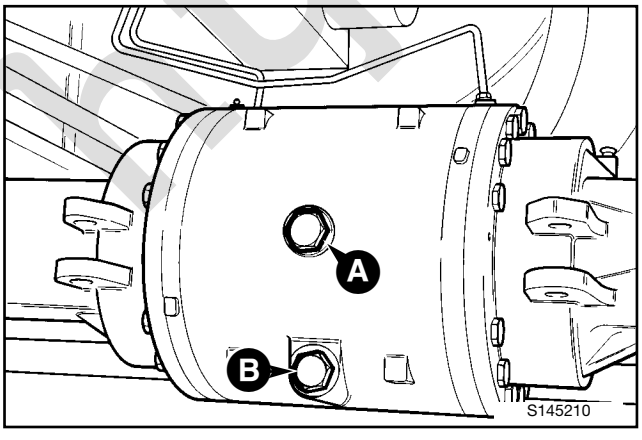

Changing the Differential Oil

WARNING

Make the machine safe before getting beneath it. Lower the attachments to the ground; engage the parking brake; remove the starter key, disconnect the battery.

2-3-2-2

The axle oil is used to lubricate the brake components and cool the brake plates.

It is important that the oil is changed regularly as specified in the service schedule - the lubricating properties of the oil will reduce as a result of brake wear.

Consult your JCB distributor for advice if necessary.

1 Park the machine on level ground. Engage the parking brake. Set the transmission to neutral. Lower the attachments to the ground. Stop the engine and remove the starter key.

2 Place a container of suitable size beneath the drain plug **B** to catch the oil.

CAUTION

Oil will gush from the hole when the drain plug is removed. Keep to one side when you remove the plug.

2-3-4-2

Remove the drain plug **B**. Allow the oil to drain out. The drain plug is magnetic. Wipe it clean. (Metallic particles should be carefully removed). Clean and refit the drain plug **B**. Tighten to 79 Nm (60 lbf ft).

3 Remove fill/level plug **A**. Fill the axle with the specified quantity and recommended type of oil. Clean and refit fill/level plug **A**.

FRONT AND REAR AXLE

Checking the Hub Oil Levels

Check each hub separately.

1 Park the machine on level ground with the OIL LEVEL mark horizontal. There is a tolerance of 5 mm (0.2 in) above or below the horizontal.

2 Engage the parking brake. Set the transmission to neutral. Lower the attachments to the ground. Stop the engine and remove the starter key.

3 Clean the area around the fill/level plug **C**. Remove the plug. Oil should be level with the bottom of the hole. If necessary, add the recommended oil. Clean the plug before refitting it.

Changing the Hub Oil

Change the oil in each hub separately

1 Set the machine level, with the tyres just clear of the ground. Manually rotate the wheels to bring the OIL LEVEL mark on the hubs to the vertical position, with the fill/level plugs **C** at the bottom.

2 **a** Place a container of suitable size beneath plug **C** to catch the oil.

b Remove fill/level plugs **C**. Allow time for the oil to drain out.

3 **a** Set **OIL LEVEL** marks to the horizontal.

b Fill the hubs with recommended axle oil, through the fill/level holes **C**. Oil should be level with the bottom of the fill/level hole.

c Clean and refit fill/level plugs **C**.

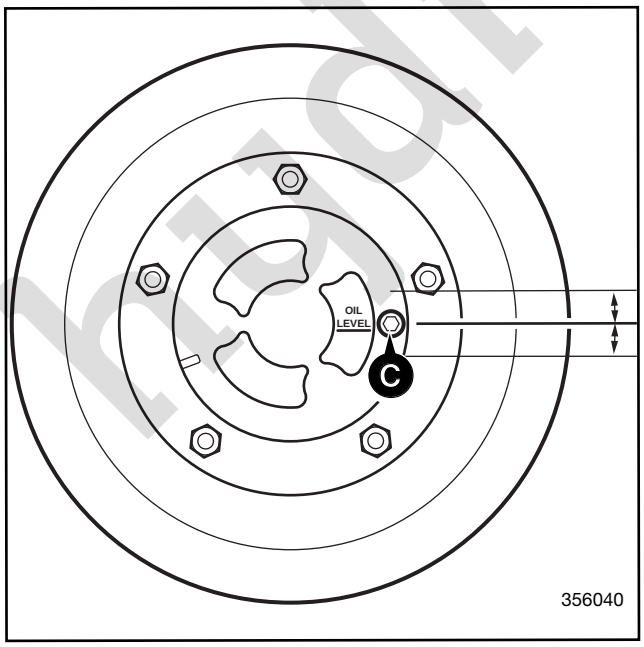

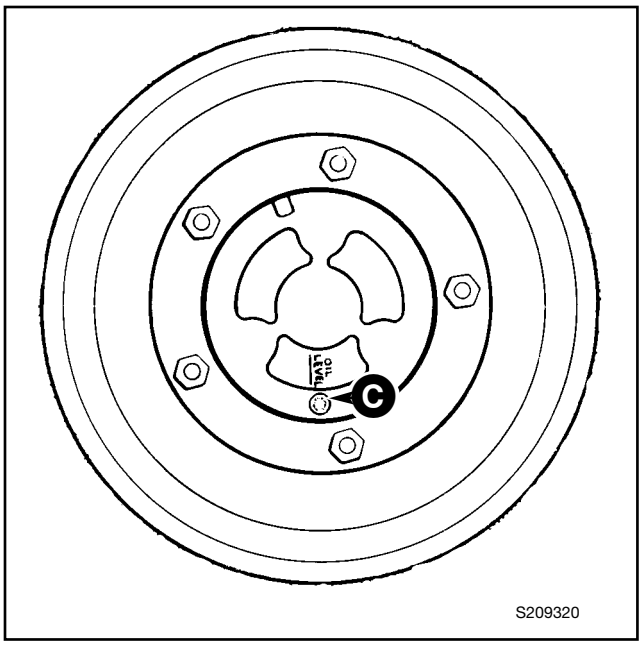

ELECTRICAL SYSTEM

Fuse Identification

		Fuse Rating
COLUMN 'A'		
1	Hydraulic auxiliary	10 Amp
2	Fuel pump solenoid (engine stop)	5 amp
3	Direction indicators	7.5 amp
4	Steer mode proximity switch	7.5 Amp
5	Gearbox control, Transmission	10 Amp
6	Fuel & Air pumps	30 Amp
7	Brake lights	7.5 Amp
8	Headlight Flash	10 Amp
9	Left hand side lights	5 Amp
10	Right hand side lights	5 Amp
COLUMN 'B'		
1	Instruments, Buzzer	5 Amp
2	Front horn, Front washer/wiper	15 Amp
3	Rear horn	7.5 Amp
4	In-cab Power Outlet	15 Amp
5	Rear wiper/wash	10 Amp
6	Brake switch	10 Amp
7	Return to dig enable	5 Amp
8	Rear working lights	25 Amp
9		
10	Front working lights	25 Amp
COLUMN 'C'		
1	Lights	15 Amp
2	Hazard light	15 Amp
3	Convoy lights/sidelights	5 Amp
4	Beacon	5 Amp
5	Thermostart	20 Amp
6	Heater	30 Amp
7	Ignition relay coils	3 Amp
8	Main beam	15 Amp
9	Fog light	3 Amp
10	Dip beam	15 Amp

Relay Identification

A Heater
B Direction indicator
C Ignition
D Ignition
E Neutral start
F Buzzer
G Combat ignition
H Rear working lights
J Front working lights
K Rear horn
L 2/4 wheel braking
M Engine run
N Combat lockout- brake lights
P Combat lockout- work lights
Q Hydraulic speed control
R Hammer
S Main lights
T 2 wheel drive
U Parking brake
V Combat lockout- reverse alarm

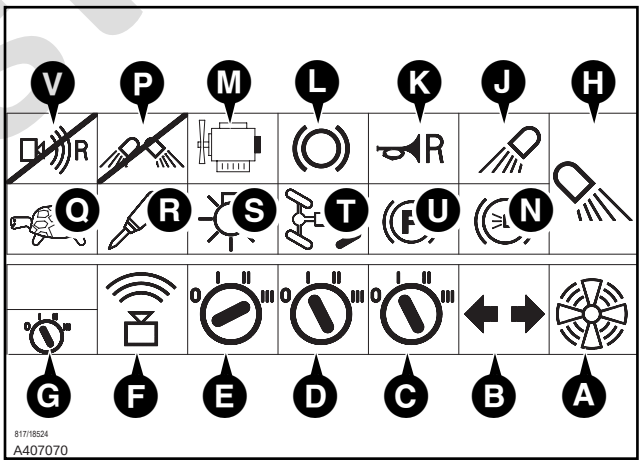

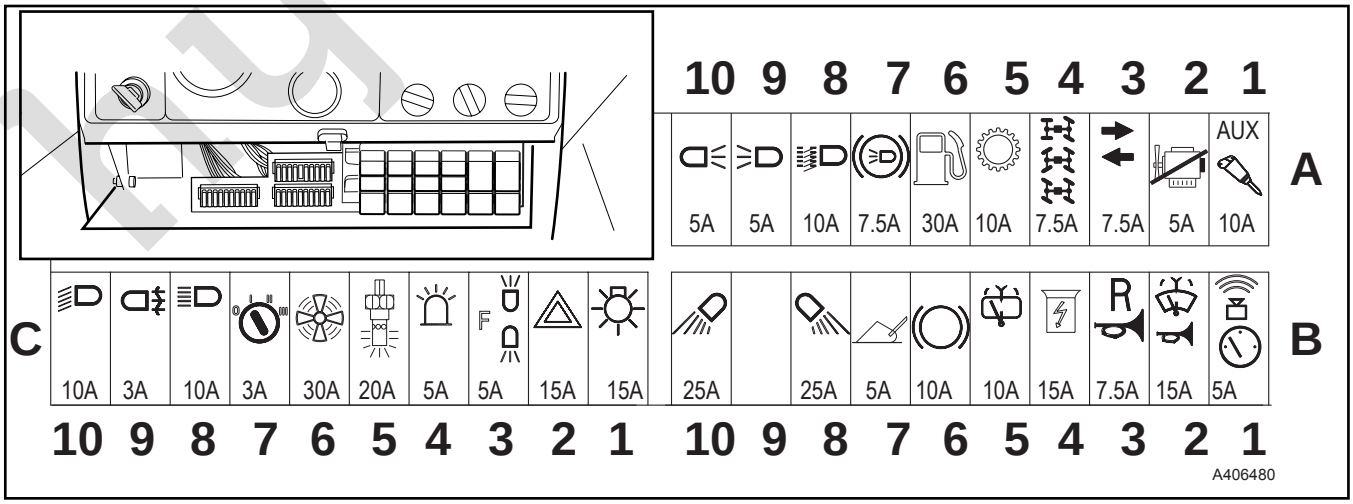

ELECTRICAL SYSTEM (continued)

Relay Identification - Powershift Transmission

1 Spare
2 Reverse drive
3 Reverse (High/Low ratio)
4 Forward (High/Low ratio)
5 Transmission dump
6 Forward drive
7 Driveshaft interlock
8 Drive (Layshaft/Mainshaft)

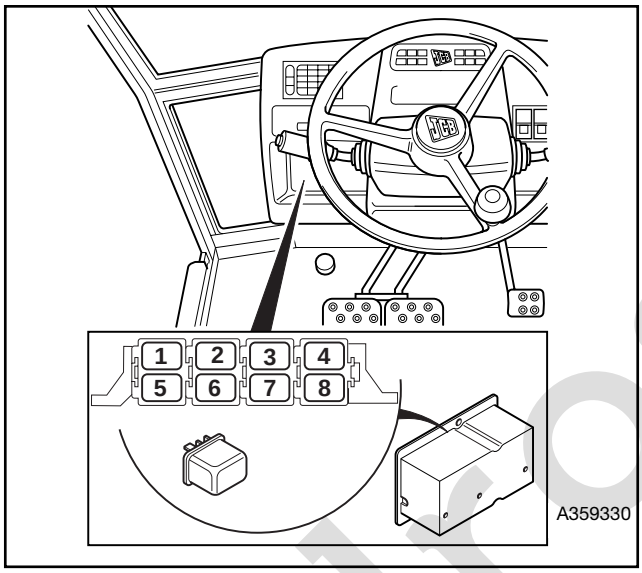

Link Box Fuses

To further protect the machine wiring harnesses and electrical circuits, a fuse link box is fitted to the battery, as shown at **B**. Remember to check the main circuit fuses as well as the link box fuses shown on this page.

1	Hazard warning lights, Beacon, Lights	30 Amp
2	Wash/Wipe, Transmission, Indicators	50 Amp
3	Work lights, Fog Lights, Brake lights	50 Amp
4	Ignition, Heater, Thermostart	50 Amp

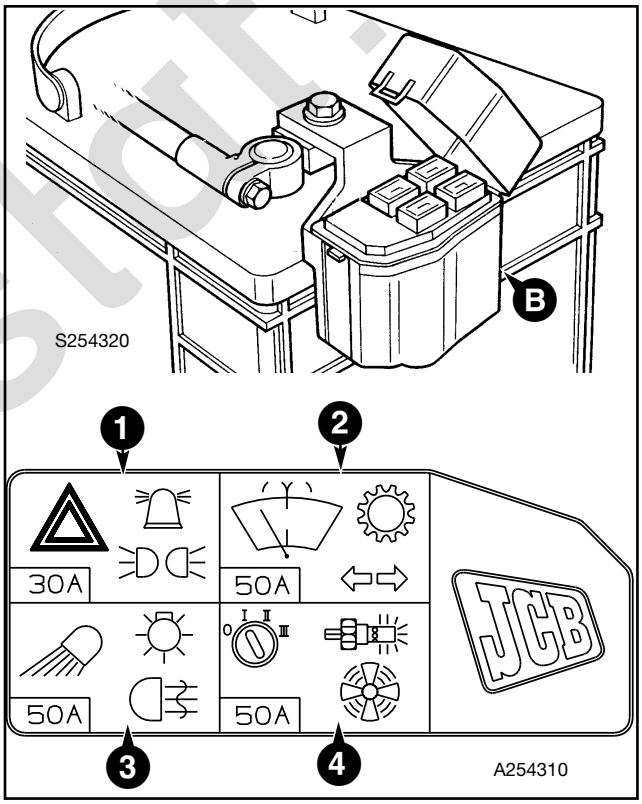

BATTERY

Warning Symbols

The following warning symbols may be found on the battery.

Symbol	Meaning
 A289230	Keep away from children.
 A289260	Shield eyes.
 A289280	No smoking, no naked flames, no sparks.
 A289250	Explosive Gas.
 A289240	Battery acid.
 A289270	Note operating instructions.

⚠ CAUTION

Do not disconnect the battery while the engine is running, otherwise the electrical circuits may be damaged.
INT- 3- 1-14

⚠ WARNING

Understand the electrical circuit before connecting or disconnecting an electrical component. A wrong connection can cause injury and/or damage.
INT-3-1-4

⚠ DANGER

Battery electrolyte is toxic and corrosive. Do not breathe the gases given off by the battery. Keep the electrolyte away from your clothes, skin, mouth and eyes. Wear safety glasses.
INT-3-2-1/3

⚠ CAUTION

Damaged or spent batteries and any residue from fires or spillage should be put in a closed acid proof receptacle and must be disposed of in accordance with local environmental waste regulations.
INT-3-1-12

⚠ WARNING

Batteries give off explosive gases. Keep flames and sparks away from the battery. Do not smoke close to the battery. Make sure there is good ventilation in closed areas where batteries are being used or charged. Do not check the battery charge by shorting the terminals with metal; use a hydrometer or voltmeter.
INT-3-1-8

BATTERY
(continued)

⚠ WARNING

Batteries give off an explosive gas. Do not smoke when handling or working on the battery. Keep the battery away from sparks and flames.

Battery electrolyte contains sulphuric acid. It can burn you if it touches your skin or eyes. Wear goggles. Handle the battery carefully to prevent spillage. Keep metallic items (watches, rings, zips etc) away from the battery terminals. Such items could short the terminals and burn you.

Set all switches in the cab to OFF before disconnecting and connecting the battery. When disconnecting the battery, take off the earth (-) lead first.

When reconnecting, fit the positive (+) lead first.

Re-charge the battery away from the machine, in a well ventilated area. Switch the charging circuit off before connecting or disconnecting the battery. When you have installed the battery in the machine, wait five minutes before connecting it up.

First Aid - Electrolyte

Do the following if electrolyte:

GETS INTO YOUR EYES

Immediately flush with water for 15 minutes, always get medical help.

IS SWALLOWED

Do not induce vomiting. Drink large quantities of water or milk. Then drink milk of magnesia, beaten egg or vegetable oil. Get medical help.

GETS ONTO YOUR SKIN

Flush with water, remove affected clothing. Cover burns with a sterile dressing then get medical help.
5-3-4-3/1

Checking the Electrolyte Level

Maintenance free batteries used in normal temperate climate applications should not need topping up. However, in certain conditions (such as prolonged operation at tropical temperatures or if the alternator overcharges) the electrolyte level should be checked as described below.

⚠ WARNING

Do not top the battery up with acid. The electrolyte could boil out and burn you.
2-3-4-6

1. Park the machine on firm level ground, engage the parking brake and set the transmission to neutral.

2. Remove battery cell covers. Look at the level in each cell. The electrolyte should be 6 mm (1/4 in) above the plates. Top up if necessary with distilled water or de-ionised water.

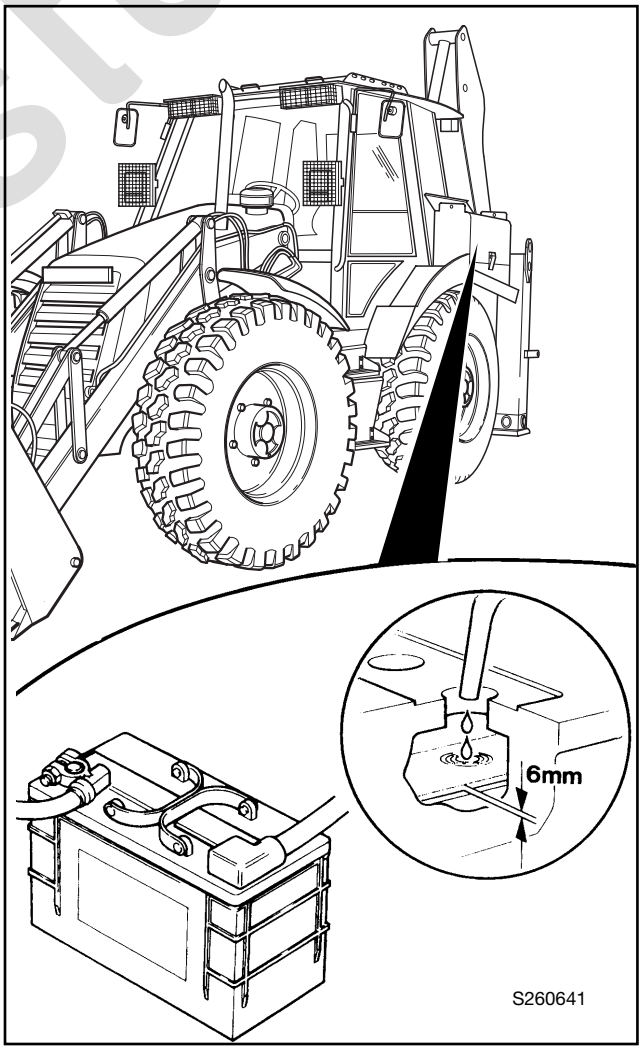

8642 - 1

BATTERY
(continued)

Battery Removal

When replacing batteries do not mix old and new batteries together, they must be replaced as a pair as the service life of a single new battery would be shortened.

⚠ WARNING

Understand the electrical circuit before connecting or disconnecting an electrical component. A wrong connection can cause injury and/or damage.
0075

1 Position the machine on firm level ground. Lower the loader arms and boom to the ground, switch Off the engine and remove the starter key.

2 Open the left hand pannier, note how the batteries are connected, disconnect the terminal leads, earth terminal first.

⚠ CAUTION

Stand on steps or other suitable platform to remove the battery, do not stand on the fender.
0075

3 Undo the 'J' bolts **A** and remove the battery.

4 When fitting batteries connect the positive terminals first.

Battery Isolator

To disconnect the battery from the machine electrics a battery isolator has been fitted.

⚠ CAUTION

Except in an emergency, do not use the battery isolator to switch OFF the engine. Failure to comply may result in damage to the electrical circuits.
INT-3-2-13

At the end of a working cycle or if the machine is being left unattended, provided the lights are not required, the battery must be isolated. Before attempting to start the engine or use the machine electrics the battery isolator key must be fitted and switched on.

1 To isolate the battery turn the battery isolator key **B** and remove. Keep the key in a safe place and available for when the machine is next required.

2 To connect the battery insert the key **B** and turn in a clockwise direction.

⚠ CAUTION

Before carrying out arc welding on the machine disconnect the battery and alternator to protect the circuits and components.

The battery must still be disconnected even if the battery isolator is fitted.
INT-3-1-13

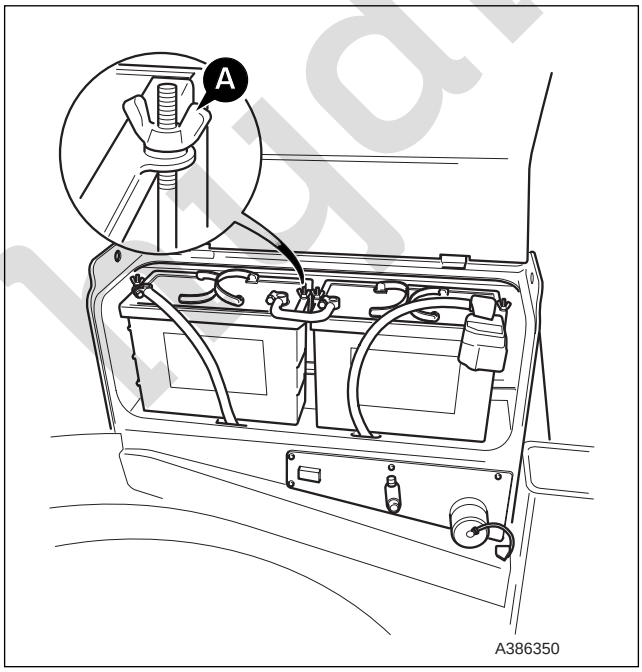

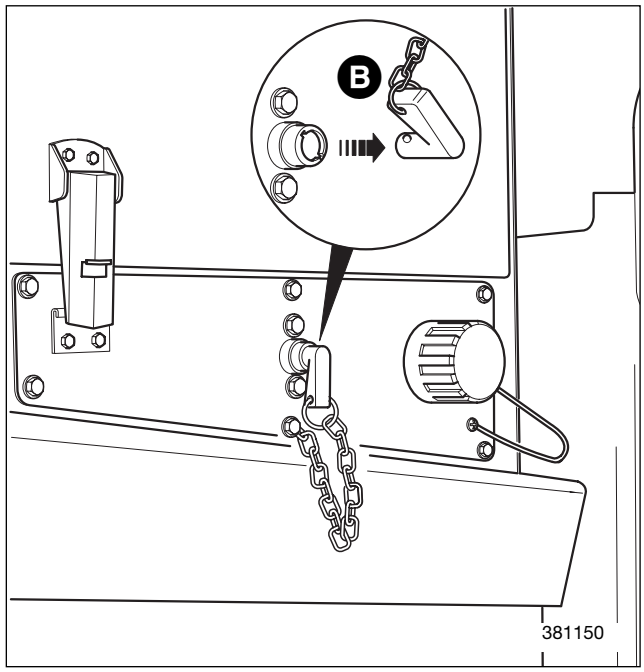

HYDRAULIC OIL COOLER

Cleaning the Tubes/Fins

The hydraulic oil cooler is in front of the engine radiator. If the hydraulic oil cooler tubes/fins get clogged (by dirt and flies etc) the radiator and cooler will be less efficient.

1 Park the machine on firm level ground, engage the parking brake and set the transmission to neutral. Raise and chock the loader arms. Lower the backhoe to the ground and stop the engine.

2 Unscrew bolts **A**. Lift off the radiator grille.

3 Brush off all debris from the cooler tubes and fins. Make sure the loosened material is brushed out of the cooler enclosure.

4 Refit the radiator grille. Tighten bolts **A** evenly.

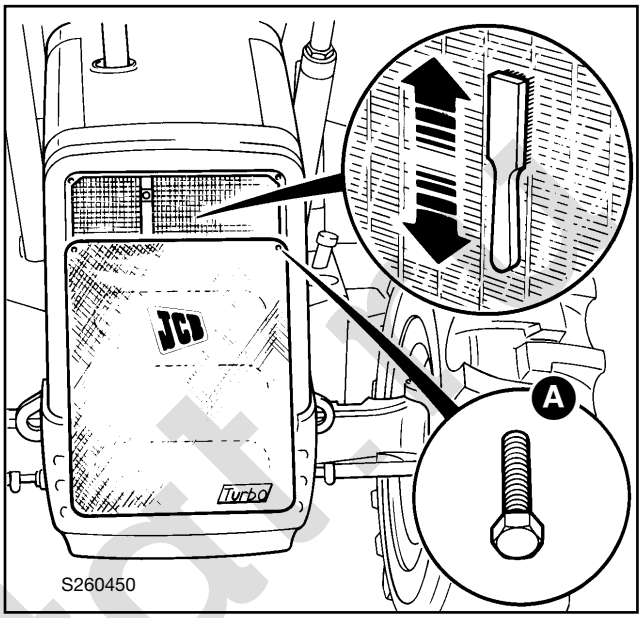

WINDSCREEN WASHER

1 Park the machine on firm level ground, engage the parking brake and set the transmission to neutral. Raise and chock the loader arms. Lower the backhoe to the ground and stop the engine.

2 Fill the windscreen washer bottle **B** with a suitable liquid. The liquid should contain a de-icing fluid to prevent freezing. Do not use engine coolant antifreeze.

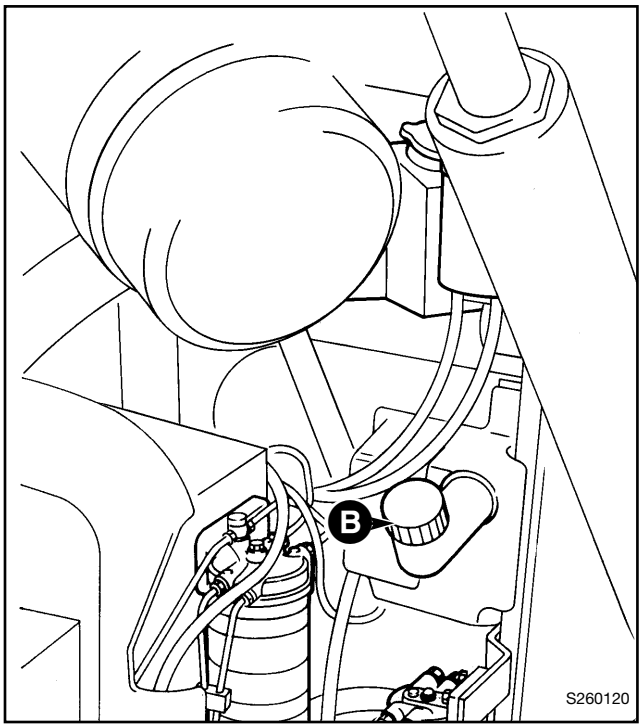

STABILISER LEGS

Wear Pads

The wear pads support and guide the inner leg section. They ensure that during extension and retraction the inner leg is kept central and has a minimum amount of 'float'.

Upper wear pads **A** (4 off) are fitted to the top of the inner leg as shown. The upper pads are available in 3 sizes and are colour coded; 5mm (green); 6mm (red) and 7mm (blue). Lower wear pads comprise adjustable pads **B** (2 off) and fixed pads **C** (2 off).

When pads **A** and **C** have worn to a minimum thickness of 0.5 mm (0.020 in.) they must be replaced with new ones. To replace the pads, the stabiliser inner leg must be removed (contact your JCB Distributor).

It is important to note that lower pads **C** are designed to take most of the 'loading' during stabiliser leg operation, as a consequence these pads must be checked regularly for wear.

When replacing pads, it is recommended that the complete lower set of pads are replaced (items **B** and **C**). The top pads should be inspected and replaced as required.

Wear Pad Adjustment

Note: It is very important that the wear pads are adjusted at the correct service intervals, as the inner leg could contact the outer leg and scoring could occur. Scoring will dramatically reduce wear pad life.

As a guide, there should be approximately 1mm (0.039 in.) float between the stabiliser inner and outer leg.

Before adjusting the clearance make sure that the leg is raised clear of the ground but not fully retracted.

To adjust the clearance, screw pad **B** fully in until it just touches the inner leg and then back the pad off by one quarter of a turn.

Note: Over-tightening the adjustable pad **B** will lock the pad in position, it will not be possible to back the pad off. If this should happen, operate the stabiliser leg as normal but be aware that pads **B** and **C** will wear more rapidly.

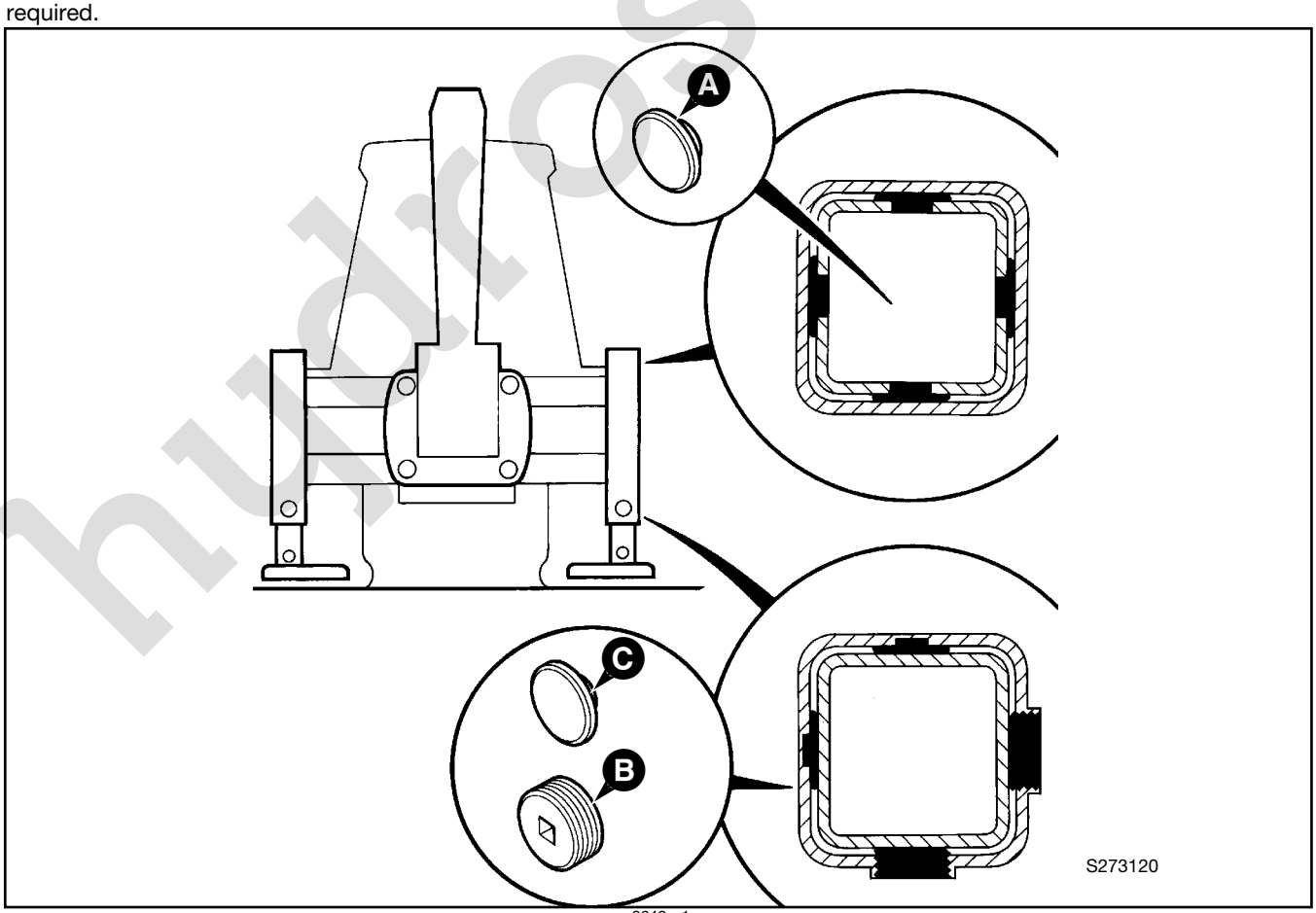

8642 - 1

STORAGE

Storing the Machine

If the machine is not going to be used for an extended period of time, you must store it correctly to prevent deterioration.

1 Thoroughly clean the machine to remove corrosive products.

2 Fill the fuel tank to prevent condensation forming in the tank.

3 Park the machine on firm level ground (preferably under cover). Make sure you do not park the machine in an awkward position that would prevent it from being towed at the end of the storage period (in case the machine will not start).

4 Stop the engine, retract and lower the loader arms/boom and dipper to the ground. Release the hydraulic tank filler cap and operate the controls to relieve all hydraulic circuits of residual pressure.

5 Apply a light coating of suitable grease or petroleum jelly to all exposed ram piston rods.

6 Check all oil levels and replenish if necessary.

7 Check coolant level and condition. Replenish if necessary.

8 Remove and charge the battery. Store the battery in a warm dry place and recharge periodically.

9 Check the tyre pressures. Adjust if necessary.

10 Check the machine for worn or damaged parts. Replace if necessary.

11 Periodically rotate the road wheels to prevent distortion of the tyre ply.

FIRE EXTINGUISHER

Checking the Fire Extinguisher

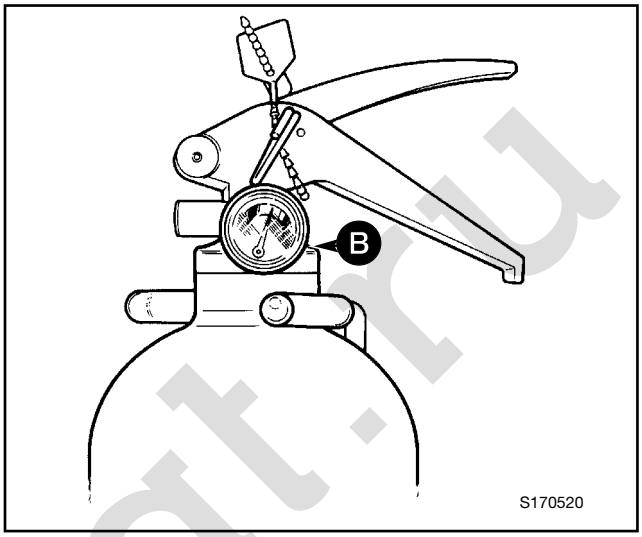

Check that the tamper seal intact and the safety pin is is in place. Check that the nozzle is clean and unobstructed.

If possible weigh the extinguisher and record on the service record label. If the extinguisher weighs less than 3.00 kg. remove from service and fit new extinguisher.

Check that the gauge **B** indicates that the extinguisher is charged ie. the needle is in the GREEN segment. If the pointer is in the red zone, remove from service and fit a new extinguisher.

The gauge **B** can be checked by unscrewing it from the extinguisher, the needle should return to zero. Screw the gauge back in, the needle should return to the green segment.

Note: It is safe to remove the gauge there is a check valve behind the gauge which prevents the extinguisher from losing pressure.

SERVICE CAPACITIES AND LUBRICANTS

ITEM	CAPACITY Litres	CAPACITY UK Gal	FLUID/LUBRICANT	MILITARY EQUIVALENT Ambient climate	MILITARY EQUIVALENT Cold climate
Fuel Tank	150	33	No 2 Diesel Fuel	Dieso Military	Avtur F34
Engine (Oil) ①	10	22	**SAE 10W/30** API CE4/SF -15°C to +40°C (5°F to 104°F)	OMD-90	OMD-55
			SAE 15W/40 API CF4/SG -10°C to +50°C (14°F to 122°F)	OMD-90	OMD-55
Engine (Coolant)	23.0	5.1	**50% Ethylene Glycol Solution** ASTM D3306, BS6580 -25°C to +40°C (-12°F to 104°F)	AL-39 (50%)	
			60% Ethylene Glycol Solution -40°C to +40°C (-40°F to 104°F)	AL-39 (60%)	AL-39 (60%)
Transmission ②	15.4	3.4	**JCB Extreme Performance** NSN 9150-99-8310669	Castrol TQF	Castrol TQF
Front Axle	13	2.86	**JCB Special Gear Oil Plus API-GL-4**	OEP-220	OEP-220
Hubs (x2)	2.0	0.44	**JCB Special Gear Oil Plus API-GL-4**	OEP-220	OEP-220
Rear Axle	23	5.0	**JCB Special Gear Oil Plus API-GL-4**	OEP-220	OEP-220
Hubs (x2)	2.0	0.44	**JCB Special Gear Oil Plus API-GL-4**	OEP-220	OEP-220
Brake System	1.4	0.31	**JCB Light Hydraulic Oil**	OM-18	OM-18
Hydraulic system ③	150	33	**ISO VG32**	OM-33	OM-18
Grease Points	---	---	**JCB 'Special' MPL Grease**	XG-279	
Electrical connections		---	As a corrosion and moisture inhibitor all exposed connections should be coated liberally with petroleum jelly.		
Optional Attachments:					
Hammermaster Grease Points	---	---	**JCB 'Special' MPL Grease**	XG-279	
Tool Shank & Bushings	--	---	**JCB 'Special' Hammer Grease**		
Earth Drill Gearbox	1.8	0.4	**JCB Super Universal Agricultural SAE10W/40**	OMD-90	
Sweeper Collector Grease Points	---	---	**JCB 'Special' MPL Grease**	XG-279	

SERVICE CAPACITIES AND LUBRICANTS (continued)

① **Note:** New engines DO NOT require a running-in period. The engine/machine should be used in a normal work cycle immediately, glazing of the piston cylinder bores, resulting in excessive oil consumption, could occur if the engine is gently run-in. Under no circumstances should the engine be allowed to idle for extended periods; (e.g. warming up without load). Engines of new machines are filled at the factory with JCB 10W/30 Multigrade oil. This oil should be drained after the first 100 hours operation and the engine filled with the appropriate recommended grade as shown in the lubrication chart. JCB 10W/30 Multigrade should also be used for the first 100 hours operation whenever a new or reconditioned engine is fitted to the machine. After the first 100 hours operation, it is essential that the 10W/30 oil is replaced by the lubricant recommended. The figure quoted is TOTAL system capacity. Use the MIN and MAX marks on the dipstick when filling the system. Figures quoted within ±0.5 litre (0.11 U.K. gal).

② **Note:** The figure quoted is TOTAL system capacity. Use the MIN and MAX marks on the dipstick when filling the system. Figures quoted within ±1.0 litre (0.22 U.K. gal).

③ **Note:** The total hydraulic system capacity depends on the equipment being used. Fill with all rams closed. Watch level indicator on hydraulic tank.

⑤ ⚠ **WARNING:** Waxoyl contains turpentine substitute, which is inflammable. Keep flames away when applying Waxoyl. Waxoyl can take a few weeks to dry completely. Keep flames away during the drying period. Do not weld near the affected area during the drying period. Take the same precautions as for oil to keep Waxoyl off your skin. Do not breathe the fumes. Apply in a well-ventilated area.

GEN-1-3

INTRODUCTION

⚠ WARNING

Use only the JCB approved attachments that are specified for your machine. Operating with non-specified attachments can overload the machine, causing possible damage and machine instability which could result in injury to yourself or others.

2-4-5-2

JCB attachments are designed and manufactured specifically to suit the machine's hydraulic system, mounting arrangements and safe load requirements. Attachments which are not designed for use with this machine may cause damage and create safety hazards for which JCB cannot be held responsible. In addition the machine's warranty, "CE" and any other legislative compliance may be affected by the use of non JCB approved attachments.

2-4-1-13/2

⚠ CAUTION

If you have an optional attachment which is not covered in this handbook, do not fit it or use it until you have obtained, read and understood the attachment operating information.

2-4-1-1

This part of the handbook includes general information on backhoe attachment operation and instructions for installation and removal of attachments.

Practice using attachments off the job before working with them for the first time.

All optional attachments will have limits on their operation. i.e. lifting capacity, speeds, hydraulic flow rates, etc. Always check in the *SPECIFICATION* section of this handbook. Some specification limits may also be displayed on the attachments Data/Rating Plate.

⚠ CAUTION

Some attachments may contact parts of the machine when in the fully folded position. Take extra care to avoid damage to the machine.

3-4-1-4

Remember, do not operate attachments until you have read and fully understand the attachment operating instructions.

BACKHOE ATTACHMENT OPERATION

High and Low Flow Attachments

Refer also to **Backhoe Foot Pedal Control** (OPERATION section).

Attachments fitted to the backhoe are operated by either a 'high flow' of hydraulic fluid or a 'low flow' of hydraulic fluid.

The operator has the option of operating a high flow attachment or a low flow attachment. However, notice that hoses and pipework may have to be manually re-coupled.

An auxiliary attachment that operates with a high flow rate of hydraulic fluid is the Rockbreaker. An auxiliary attachment that operates with a low flow rate of hydraulic fluid is the Jaw Bucket.

Refer also to ***Auxiliary Return Hose Options*** (this section).

High or low flow is selected using rocker switch **A**, make sure that the rocker switch is in the correct position to suit the type of attachment fitted, this is especially so when operating a low flow attachment.

⚠ CAUTION

Using a high flow of hydraulic oil to operate a low flow optional attachment could damage the attachment. Make sure that the control switch is in the low flow position (switch not pressed down) to operate low flow attachments.

2-4-1-10

With the rocker switch in the off position (switch NOT pressed) a low flow of hydraulic oil operates the optional attachment when the foot operated pedal **B** is pressed.

With the rocker switch in the on position (switch pressed down) a high flow of hydraulic oil operates the optional attachment when the foot operated pedal **B** is pressed.

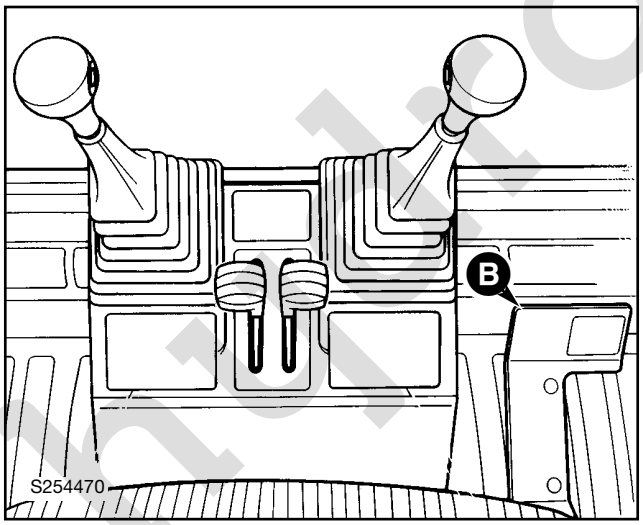

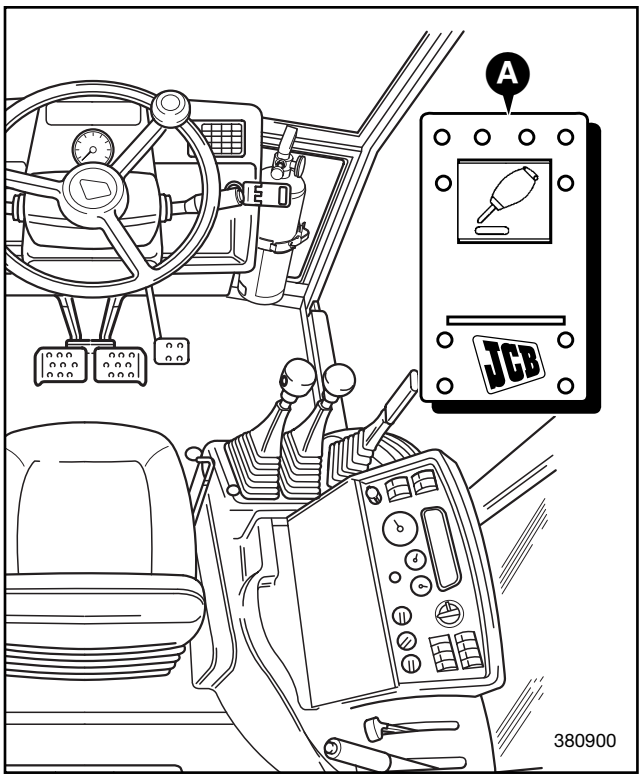

QUICK RELEASE COUPLINGS

Flat face quick release couplings allow the operator to remove and install attachments swiftly and efficiently. Generally, your machine pipework will have female couplings **A** fitted, and the optional attachment hoses will have male couplings **B** fitted.

The quick release couplings should be trouble free and relatively easy to connect and disconnect, provided they are kept clean and used correctly. The recommendations listed below should always apply when using flat face quick release couplings.

Finally, please read the correct fitting and releasing procedures before installing or removing any optional attachment fitted with quick release couplings.

Quick Release Couplings - Do's & Don'ts

DO wipe the two faces of the coupling and make sure they are clean before connecting.

DO make sure the outside sleeve (female coupling) is pulled back when disconnecting.

DO connect and disconnect a new coupling two or three times to 'work' the PTFE seals - sometimes a new coupling will stick if the seals have not been 'worked'.

DO use a spanner on the hexagon flats of the coupling when fitting adaptors.

DO use a rubber or hide hammer to disconnect a coupling if it sticks - sticking may occur if there is dirt present in the coupling.

DON'T attempt to re-connect a damaged half coupling - this will destroy the seals and necessitate replacing both half couplings.

DON'T leave the coupling where it may be run over by a machine or otherwise crushed - this will distort the coupling sleeve and prevent correct connection and disconnection.

DON'T clamp on the smooth diameter of the coupling when fitting adaptors - always use the hexagon.

DON'T try to turn the sleeve (female coupling) when the coupling has been disconnected - the locking ball will wedge underneath the sleeve and destroy the coupling.

DON'T damage the faces of the couplings - this can prevent connection and disconnection, or damage seals and cause leakage.

DON'T try to dismantle the couplings - they are non serviceable parts. If a coupling is damaged it should be replaced with a new one.

⚠ WARNING

Hydraulic fluid at pressure can injure you. Make the machine safe before connecting or disconnecting quick release couplings; stop the engine and then operate the attachment control a few times to vent residual hydraulic pressure in the attachment hoses.
2-4-1-11

⚠ WARNING

The external surfaces of the couplings must be clean before connecting or disconnecting. Ingress of dirt will cause fluid leaks and difficulty in connecting or disconnecting. You could be killed or seriously injured by faulty Quick Release Couplings.
2-4-1-15

Before connecting or removing any hydraulic hose, residual hydraulic pressure trapped in the service hose line must be vented. This is usually achieved by switching off the engine and then operating the attachment control lever several times. Make sure the hose service line has been vented before connecting or removing hoses.

Connecting Quick Release Couplings

1. Remove any residual hydraulic pressure trapped in the service line hose.
2. Wipe the two faces of the male and female couplings and make sure they are clean.
3. Make sure that ball **C** in the female coupling is located in one of its slots.
4. Fit the male coupling into the female coupling; To ensure that the coupling is not accidentally released, rotate sleeve **E** a quarter turn and make sure that the locking ball **C** does not align with the slot **D**.

Disconnecting Quick Release Couplings

1. Remove any residual hydraulic pressure trapped in the service line hose.
2. Align the slot **D** with ball **C**.
3. Pull back sleeve **E** to release the coupling.

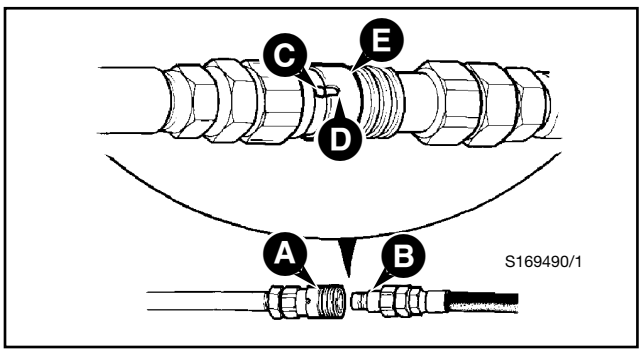

LOADER QUICKHITCH

The Loader Quickhitch carriage is fitted to the loader arms as shown. The Quickhitch permits rapid removal and installation of the shovel (and other attachments). If forks are used with the Quickhitch, please take note of the warning below.

⚠ WARNING

Forklift operation is a specialised area of materials handling. If forks are fitted to the Quickhitch then operator training is recommended, and in some territories a legal requirement.

Failure to comply may render the operator vulnerable to criminal prosecution.
2-4-5-1

Installing the Quickhitch Carriage

Note: This job is easier done by two people - one to operate the controls and one to line up the pivots.

1 Set the Quickhitch carriage on firm level ground. Use safe and correct lifting equipment to move the Quickhitch carriage.

2 Position the machine so that the loader arms mounting area aligns with the Quickhitch mounting. Engage the parking brake and set the transmission to neutral.

⚠ WARNING

If two people are doing this job, make sure that the person working the controls is a competent operator. If the wrong control lever is moved or the controls are moved violently, the other person could be killed or injured.
2-2-6-5

3 Operate the controls to line up holes in the loader arms with holes in the Quickhitch carriage, shown at **D**. Insert pivot pin **A** and secure in position with bolt **B** and nut **C**.

Note: Use anti-seize paste on the pivot pin before fitting.

4 Operate the controls to line up holes in the link with holes in the Quickhitch carriage. Insert pivot pin **A** and secure in position with bolt **B** and nut **C**.

5 Connect the hydraulic hoses as follows:

a Stop the engine.

b Operate the auxiliary control lever **E** in the cab to release any hydraulic pressure trapped in the system.

c Remove any blanking plugs and fit the quick-hitch carriage hoses to the machine couplings as shown at **F**. The hoses should not be crossed over.

Removing the Quick-Hitch Carriage

Removal of the Quick-Hitch carriage is a reversal of the installation procedure. Pay particular attention to safety notices.

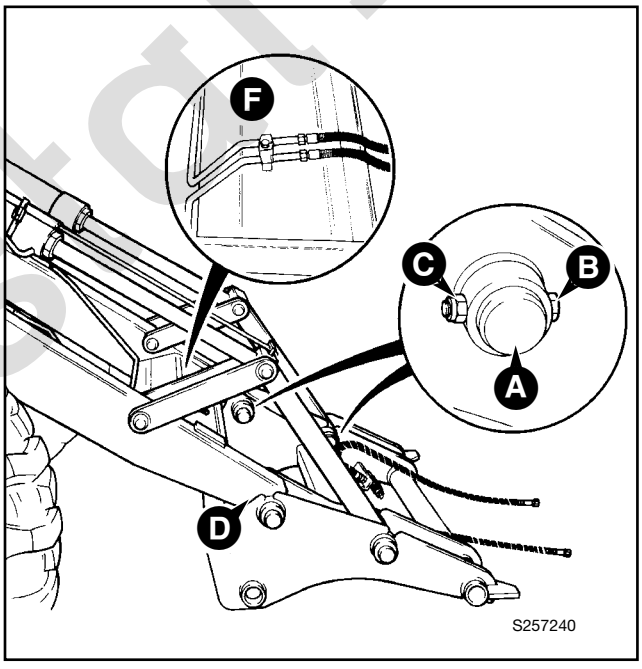

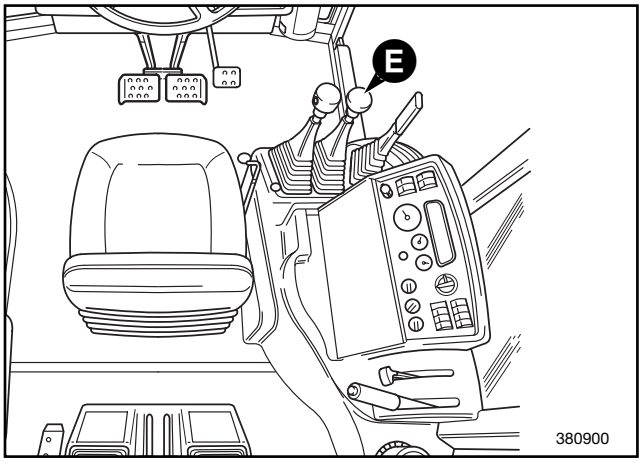

LOADER QUICKHITCH (continued)

Installing Loader Quickhitch Attachments

Various auxiliary attachments can be used with the Quickhitch. The following procedures show a shovel being installed/removed. If forks are used with the Quickhitch, please take note of the warning below.

⚠ WARNING

Forklift operation is a specialised area of materials handling. If forks are fitted to the Quickhitch then operator training is recommended, and in some territories a legal requirement.

Failure to comply may render the operator vulnerable to criminal prosecution.
2-4-5-1

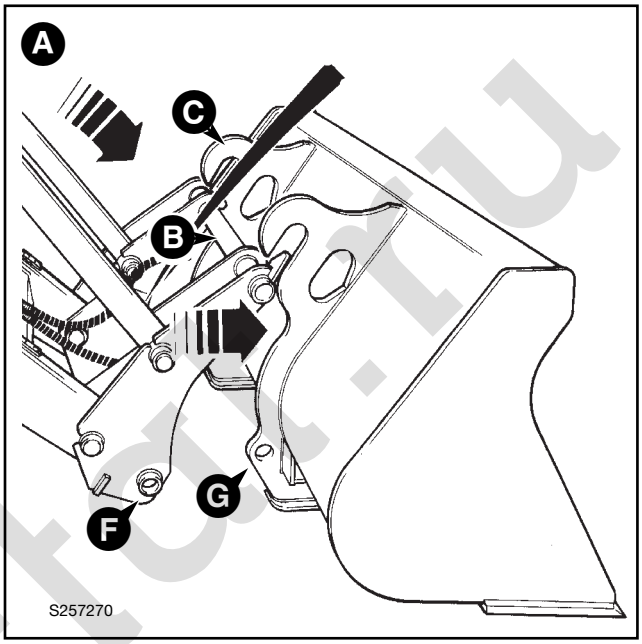

1 Set the attachment on firm level ground. Use safe and correct lifting equipment to move the attachment.

2 If there is already an attachment fitted to the machine then see ***Removing Loader Quickhitch Attachments.***

3 Position the machine so that the Quickhitch carriage is parallel to the attachment, as shown at **A**. Lower the loader arms to bring pivot shaft **B** below the level of hooks **C**.

4 Set the change-over valve **D** on the Quickhitch carriage to the correct position as shown at **E**, so that the auxiliary control lever in the cab will operate the Quickhitch locking pins.

5 Engage the attachment as follows:

- **a** Drive the machine slowly forward, stop the movement when pivot shaft **B** touches the attachment.
- **b** Engage the parking brake and set the transmission to neutral.
- **c** Raise the loader arms so that pivot shaft **B** engages with hooks **C**.
- **d** Use the loader controls to roll the attachment back (as if gathering a load). Stop the movement when the locking pin holes **F** in the carriage align with the holes **G** in the attachment.

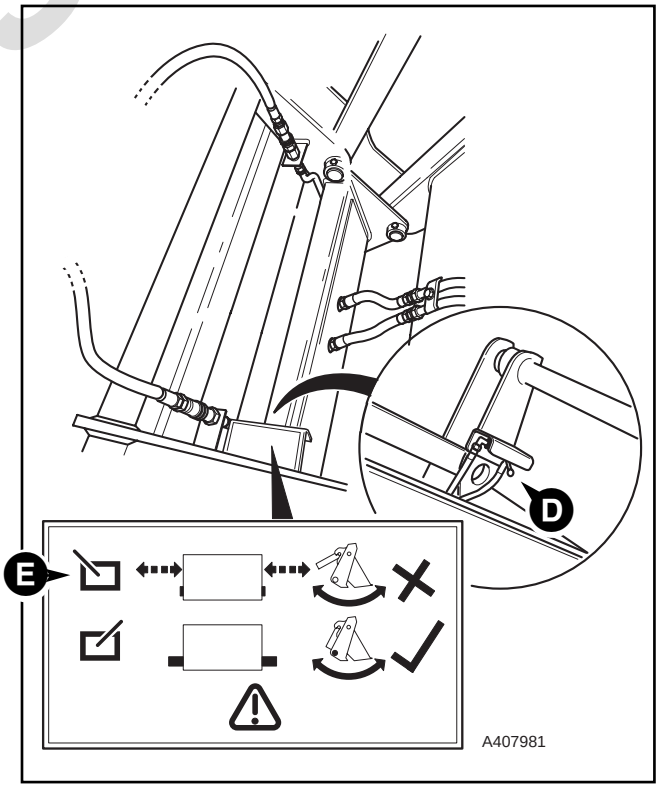

LOADER QUICKHITCH (continued)

Installing Loader Quickhitch Attachments (continued)

6 Engage the locking pins as follows:

a Make sure that the parking brake is engaged and the transmission is set to neutral.

b Move the auxiliary control lever forward to engage the Quickhitch locking pins **H.**

c At the carriage, check that the locking pins are securely engaged.

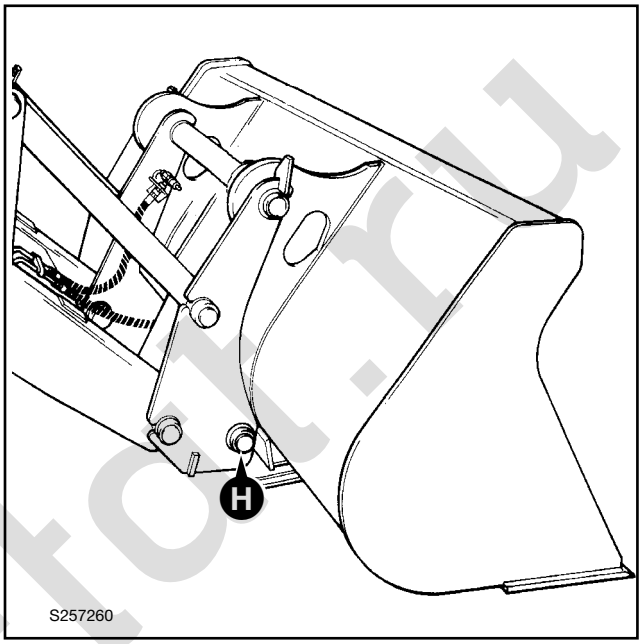

If the attachment is hydraulically operated E.g. Clam shovel, connect the hydraulic quick release couplings **K** as follows:

⚠ WARNING

Fine jets of hydraulic fluid at high pressure can penetrate the skin. Do not use your fingers to check for hydraulic fluid leaks. Do not put your face close to suspected leaks. Hold a piece of cardboard close to suspected leaks and then inspect the cardboard for signs of hydraulic fluid. If hydraulic fluid penetrates your skin, get medical help immediately.
INT-3-1-10/1

a Make sure that the parking brake is engaged and the transmission is set to neutral. Stop the engine and remove the starter key.

b Operate the auxiliary control lever, this will release any hydraulic pressure trapped in the system.

c Fit the attachment hoses at the carriage quick release couplings **K**. Refer to ***Quick Release Couplings*** at the beginning of the *OPTIONAL ATTACHMENT* section.

d Set the change-over valve **D** on the Quickhitch carriage to the correct position as shown at **E**, so that the auxiliary control lever in the cab will operate the hydraulic attachment E.g. Clam shovel.

e Start the engine and operate the attachment for a few minutes to build up the hydraulic pressure.

f Switch off the engine and check for leaks – take note of the safety warning.

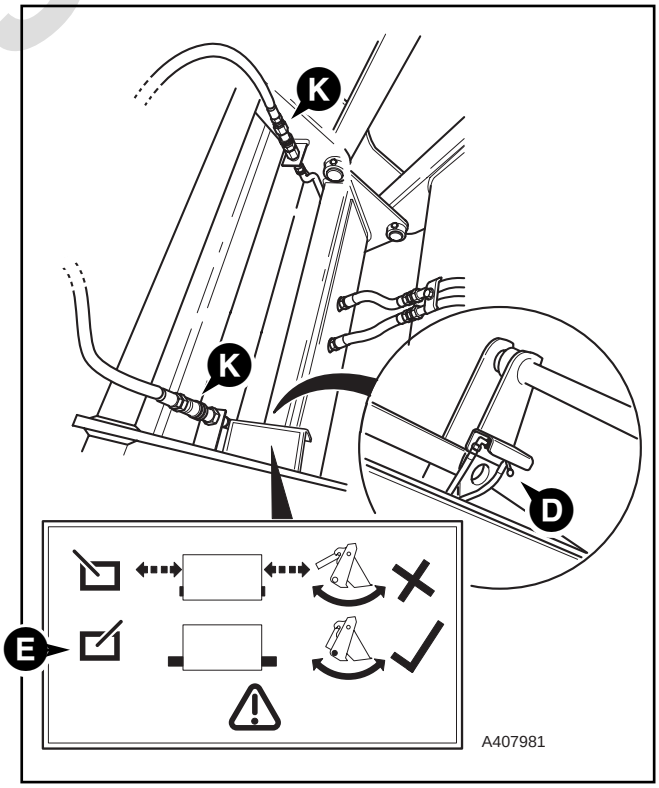

LOADER QUICKHITCH (continued)

Removing Loader Quickhitch Attachments

Note: Deposit Quickhitch attachments on firm level ground whenever possible. This will make later refitting easy and safe.

1 Park the machine on firm level ground. Engage the parking brake and set the transmission to neutral.

2 Lower the attachment to the ground.

If the attachment is hydraulically operated E.g. Clam shovel, disconnect the hydraulic quick release couplings **K** as follows:

⚠ WARNING

Fine jets of hydraulic fluid at high pressure can penetrate the skin. Do not use your fingers to check for hydraulic fluid leaks. Do not put your face close to suspected leaks. Hold a piece of cardboard close to suspected leaks and then inspect the cardboard for signs of hydraulic fluid. If hydraulic fluid penetrates your skin, get medical help immediately.

INT-3-1-10/1

a Make sure that the parking brake is engaged and the transmission is set to neutral. Stop the engine and remove the starter key.

b Operate the auxiliary control lever, this will release any hydraulic pressure trapped in the system.

c Disconnect the attachment hoses at the carriage quick release couplings **K**. Refer to ***Quick Release Couplings*** at the beginning of the *OPTIONAL ATTACHMENT* section.

3 Set the change-over valve **D** on the Quickhitch carriage to the correct position as shown at **E**, so that the auxiliary control lever in the cab will operate the Quickhitch locking pins.

4 Disengage the locking pins as follows:

a With the engine running, move the auxiliary control lever in the cab to the rear to disengage the Quickhitch locking pins **H**.

5 Disengage the attachment as follows:

a Tilt the carriage forward slowly (as if dumping a load) to withdraw the lower end of the carriage from the attachment. Then lower the loader arms to withdraw pivot shaft **B** from hooks **C**.

b Carefully reverse the machine away from the attachment.

⚠ WARNING

Keep other people clear of the area while you disengage the attachment. If a second person is to be involved in this procedure, ensure that he keeps clear of the machine and attachment until signalled by you to proceed.

5-5-1-3/1

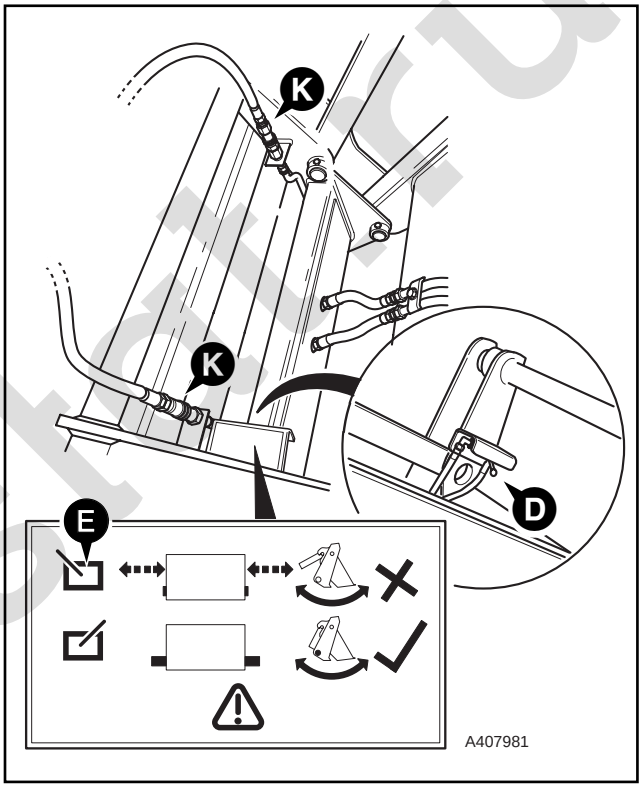

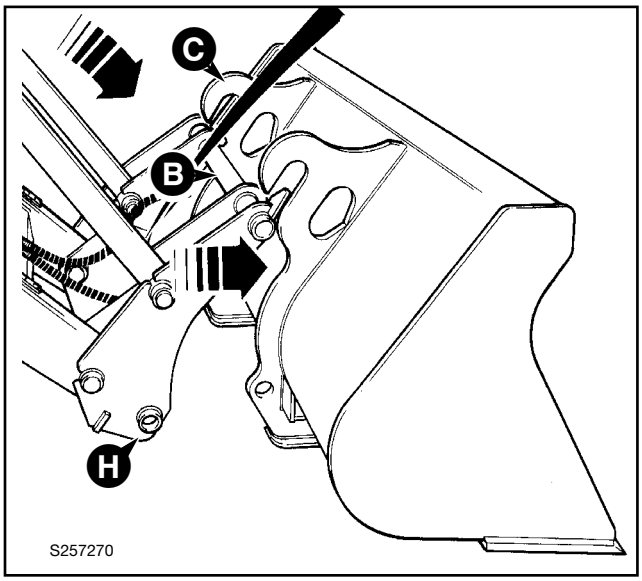

BACKHOE QUICK-HITCH (MECHANICAL TYPE)

The Backhoe Quick-Hitch is fitted to the dipper as shown. The Quick-Hitch permits rapid removal and installation of the bucket (and other attachments). It is mechanically operated and does not require any hydraulic connections.

Read the following pages for instructions on how to correctly install and remove the Quick-Hitch assembly and its attachments.

Installing the Quick-Hitch

⚠ CAUTION

When the Quick-Hitch is installed and its attachment fitted, there is a danger of the attachment hitting the underside of the boom. Operate the boom and dipper carefully when the Quick-Hitch and its attachment is fitted.
2-4-4-2

Note: This job is easier done by two people - one to operate the controls and one to line up the pivots.

1 Set the Quick-Hitch on firm level ground. Use safe and correct lifting equipment to move the Quick-Hitch.

2 Position the machine so that the Quick-Hitch mounting area on the dipper aligns with the Quick-Hitch as shown at **A.** Engage the parking brake and set the transmission to neutral.

⚠ WARNING

If two people are doing this job, make sure that the person working the controls is a competent operator. If the wrong control lever is moved or the controls are moved violently, the other person could be killed or injured.
2-2-6-5

3 Operate the controls to line up holes in the dipper with holes on the Quick-Hitch. Insert pivot pin **B** and secure in position with bolt **C**, collar **D** and nut **E**.

4 Operate the controls to line up holes in the tipping link **F** with holes in the Quick-Hitch. Insert pivot pin **G** and secure in position with bolt **H**, collar **J** and nut **K**.

Removing the Quick-Hitch

Removal of the Quick-Hitch is a reversal of the installation procedure. Pay particular attention to safety notices.

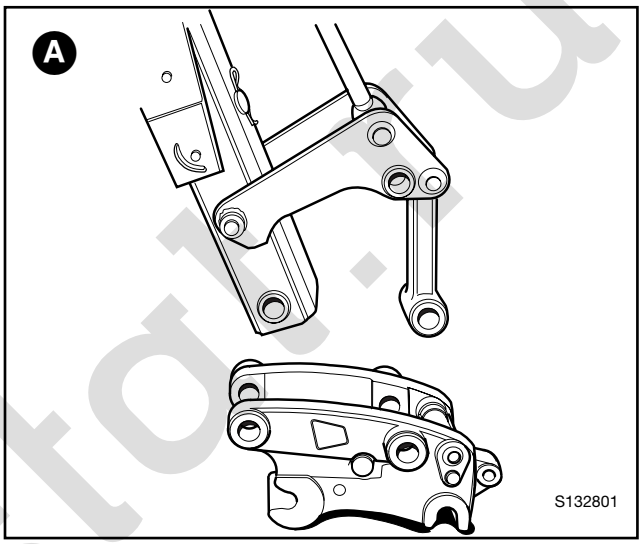

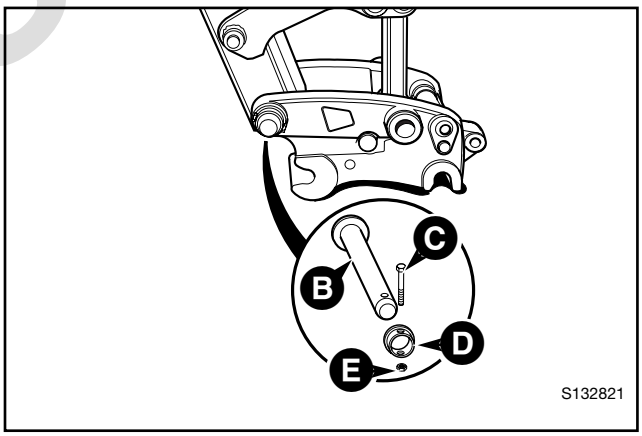

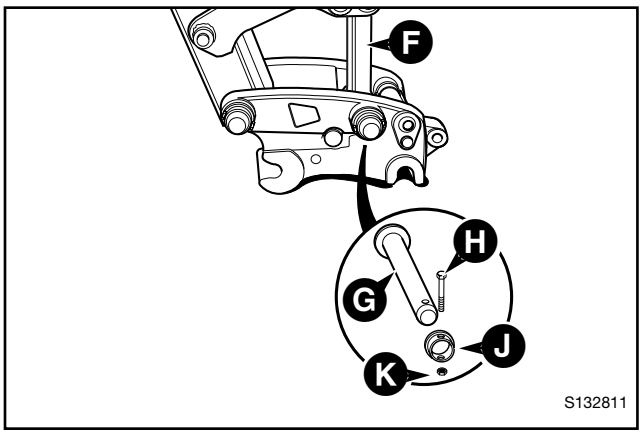

BACKHOE QUICK-HITCH (MECHANICAL TYPE) (continued)

Installing Backhoe Quick-Hitch Attachments

Note: Various auxiliary attachments can be used with the Quick-Hitch. The following procedures show a bucket being installed/removed. The bucket can be fitted the opposite way round for facing operations.

1 Set the attachment on firm level ground. Use safe and correct lifting equipment to move the attachment. If there is already an attachment fitted to the machine then see ***Removing Backhoe Quick-Hitch Attachments.***

2 Position the machine so that the Quick-Hitch mounting area aligns with the attachment pivot pins. Engage the parking brake and set the transmission to neutral.

3 Engage the attachment:
- **a** Put the Quick-Hitch in the position shown at **A**, make sure pin **F** has been REMOVED.
- **b** Use the backhoe controls to engage slot **B** onto the pivot pin **C** of the attachment.
- **c** Use the backhoe controls and roll the Quick-Hitch forward. Stop the movement when latch hook **D** has fully engaged on pivot pin **E**.
- **d** Fit the latch hook locking pin **F**. Make sure that the latch hook has fully engaged.

4 If the attachment is hydraulically operated, connect the hydraulic hose(s) as follows:

⚠ WARNING

Fine jets of hydraulic fluid at high pressure can penetrate the skin. Do not use your fingers to check for hydraulic fluid leaks. Do not put your face close to suspected leaks. Hold a piece of cardboard close to suspected leaks and then inspect the cardboard for signs of hydraulic fluid. If hydraulic fluid penetrates your skin, get medical help immediately.
INT-3-1-10/1

- **a** Stop the engine.
- **b** Operate the auxiliary control footpedal, this will release any hydraulic pressure trapped in the system.
- **c** Fit the attachment hoses to the machine quick release couplings. Refer to ***Quick Release Couplings*** at the beginning of the *OPTIONAL ATTACHMENT* section.
- **d** Start the engine and operate the attachment for a few minutes to build up the hydraulic pressure.
- **e** Switch off the engine and check for leaks – take note of the safety warning.

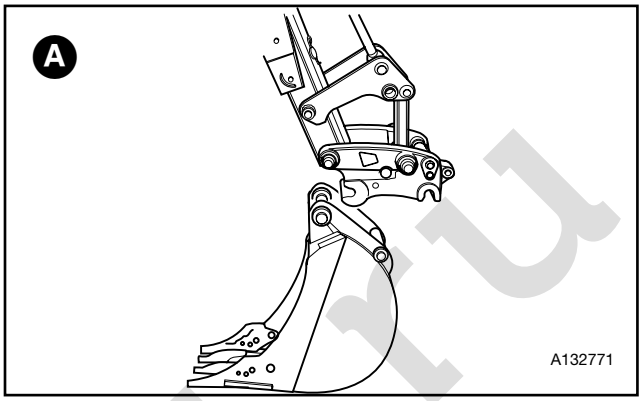

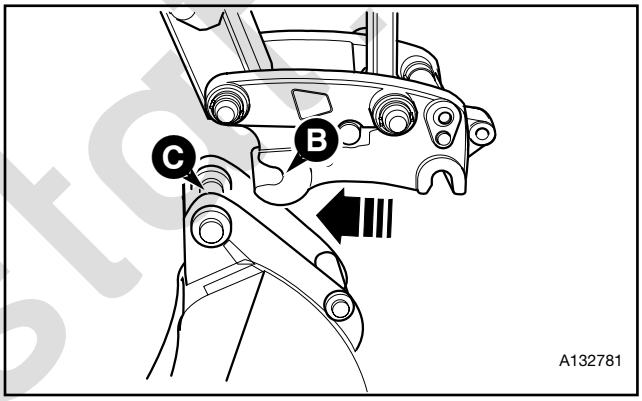

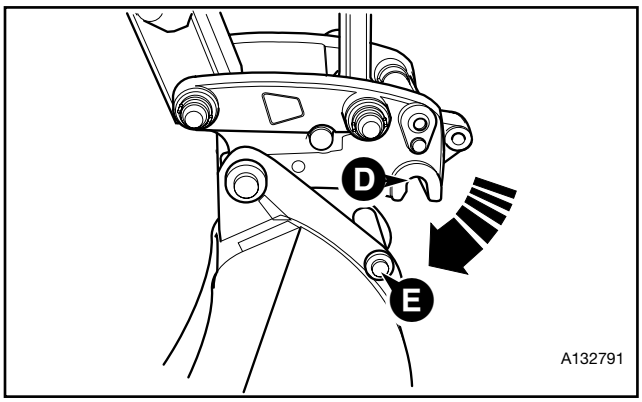

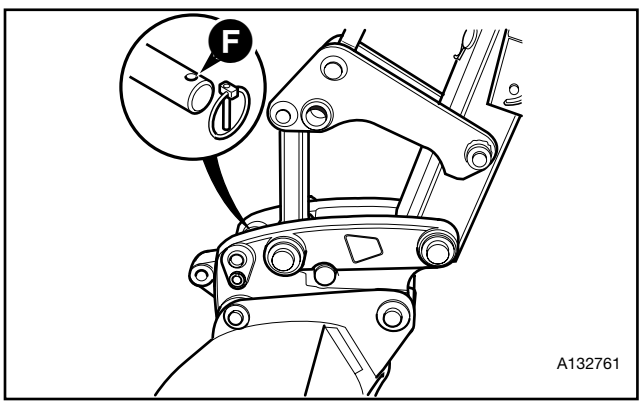

BACKHOE QUICK-HITCH (MECHANICAL TYPE) (continued)

Removing Backhoe Quick-Hitch Attachments

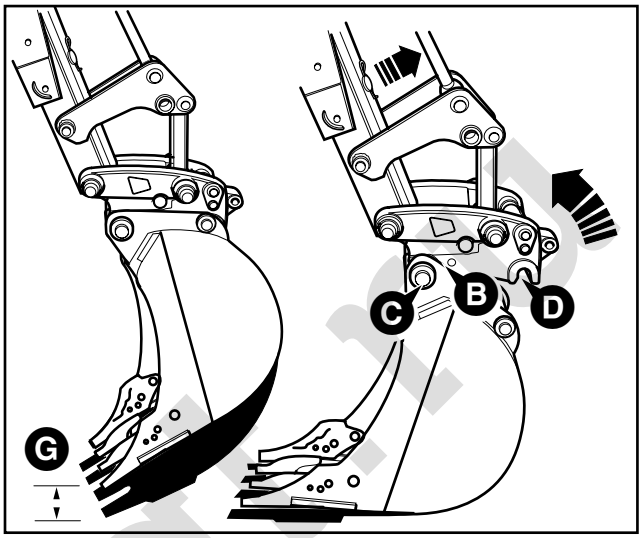

1 Park the machine on firm level ground. Engage the parking brake and set the transmission to neutral.

2 Position the attachment so that it is approximately 150 mm (6 inches) from the ground, as shown at **G**.

3 If the attachment is hydraulically operated, disconnect the hydraulic hose(s) as follows:

⚠ WARNING

Fine jets of hydraulic fluid at high pressure can penetrate the skin. Do not use your fingers to check for hydraulic fluid leaks. Do not put your face close to suspected leaks. Hold a piece of cardboard close to suspected leaks and then inspect the cardboard for signs of hydraulic fluid. If hydraulic fluid penetrates your skin, get medical help immediately.
INT-3-1-10/1

- **a** Stop the engine.
- **b** Operate the auxiliary control footpedal, this will release any hydraulic pressure trapped in the system.
- **c** Disconnect the hydraulic hose(s).

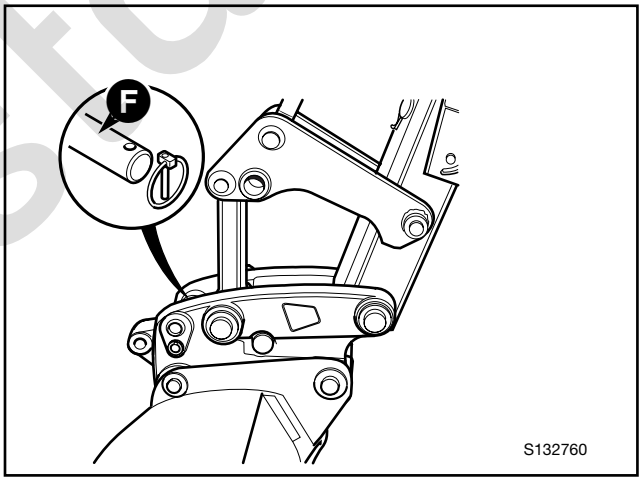

4 Disengage the attachment:

- **a** Remove the latch hook locking pin **F.**
- **b** Insert a bar into the hole of the latch hook **H**.

⚠ WARNING

The attachment will roll forward when released. Stand clear and to one side when releasing the attachment.
2-4-4-1

- **c** Apply a downward pressure on the bar to release the pivot pin **E** from the latch hook.
- **d** Rest the attachment on the ground.
- **e** Slowly roll the quick-hitch and raise the dipper arm simultaneously to release slot **B** from pivot pin **C**.

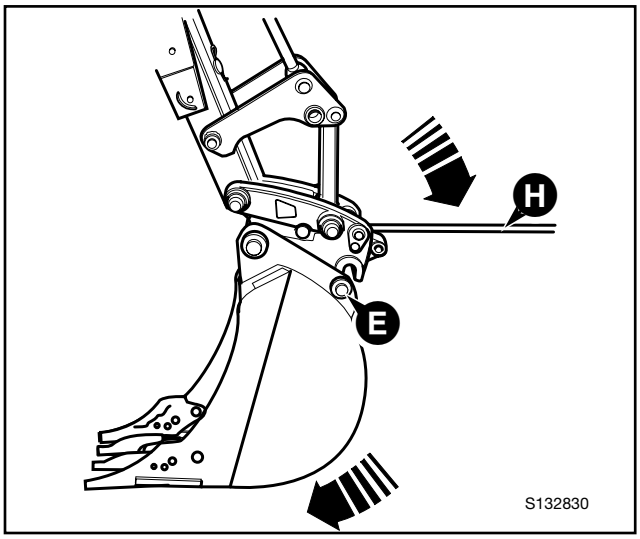

SIDESHIFT CARRIAGE

Operation Safety

Carry out all actions listed in Maintenance and report any faults immediately to a superior.

Personnel must not be transported on the forks.

The attachment must be coupled to the machine securely.

Forks must be equally spaced about the centre with the locking devices engaged.

Ensure that fingers and other parts of the hand are not trapped when fitting the forks and when adjusting their position on the carriage frame.

Do not use the attachment if the locking devices are defective.

Ensure that personnel stand clear during loading and unloading.

Do not overload the forks.

Always use both forks when loading and transporting.

The load on the attachment must be central, stable and secure at all times.

Operation

The Sideshift carriage allows the operator to accurately position both forks simultaneously with sideways movement with a load on the forks. The forks are controlled by the auxiliary control lever in the cab.

Operate the auxiliary lever as required to move the forks.

Fork spacing may be adjusted to suit the load manually.

⚠ WARNING

Loads can fall off incorrectly spaced forks. Always space the forks correctly for the load. Make sure the forks are completely under the load before lifting.
0028/1

⚠ WARNING

Forks are heavy. Take care when spacing the forks or folding the forks back.
0002

Raise the locking lever **A** and manually position the forks as required. Lower the locking lever to lock the forks in position. Make sure the locking pin positively engages in the slot after an adjustment has been made and before lifting a load.

Connect the quick release couplings **B**.

⚠ WARNING

Fine jets of hydraulic oil at high pressure can penetrate the skin. Do not use your fingers to check for hydraulic oil leaks. Do not put your face close to suspected leaks. Hold a piece of cardboard close to suspected leaks and then inspect the cardboard for signs of hydraulic oil. If hydraulic oil penetrates your skin, get medical help immediately.
INT-3-1-10/1

To sideshift the carriage make sure the change-over valve **C** on the Quickhitch carriage is set to the correct position as shown at **D**, and operate the auxiliary control lever to move the forks to the required position.

When aligning the forks with pallet frames, either look through the fresnel screen **E** to see the fork ends or use the fork position indicators **F**. When not required, raise the indicator tube **F** then fold down to the centre position **G**.

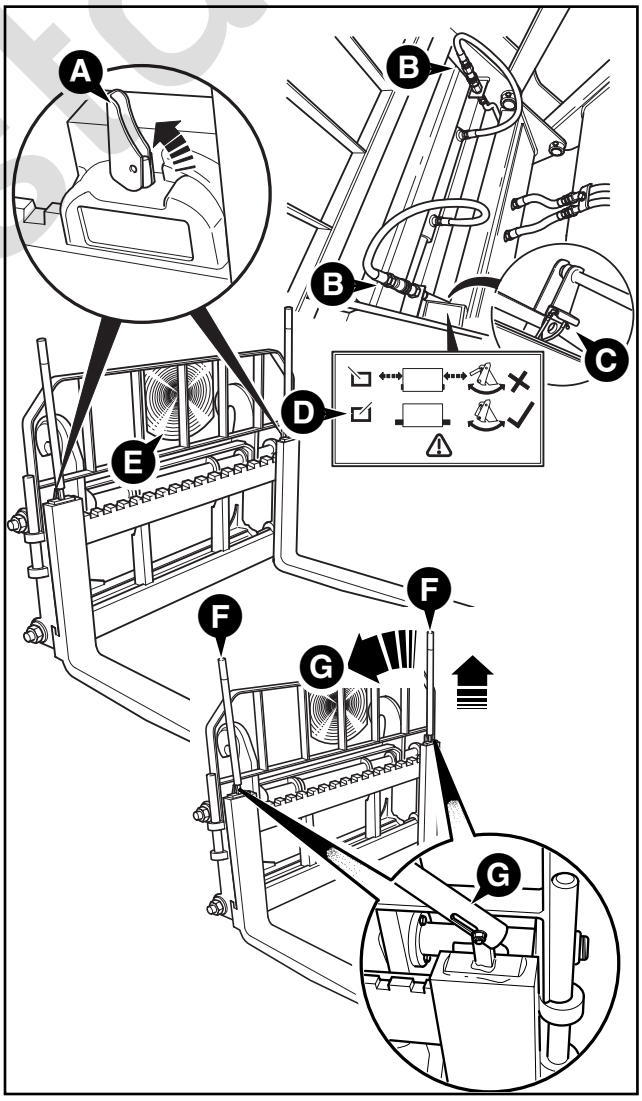

8642 - 1

SIDESHIFT CARRIAGE (continued)

Installing and Removing the Carriage

Before removing the carriage, with the engine switched OFF operate the auxiliary control lever to exhaust the hydraulic circuit.

Remove and fit the carriage, see Installing/Removing Quickhitch Attachments.

Maintenance Safety

Repairs, servicing and maintenance must be carried out by a qualified and/or specialised engineer.

All repair service and maintenance operations must be carried out on firm level ground.

Switch OFF the engine and remove the starter key before carrying out repair or maintenance tasks.

Do not change pressure relief valve settings.

Allow the hydraulic oil to cool before attempting repairs.

Do not tighten leaky connections while the system is under pressure.

⚠ WARNING

Hydraulic fluid at system pressure can injure you. Before disconnecting or connecting hydraulic hoses, stop the engine and operate the controls to release pressure trapped in the hoses. Make sure the engine cannot be started while the hoses are open.
INT-3-1-11/1

⚠ WARNING

Fine jets of hydraulic oil at high pressure can penetrate the skin. Do not use your fingers to check for hydraulic oil leaks. Do not put your face close to suspected leaks. Hold a piece of cardboard close to suspected leaks and then inspect the cardboard for signs of hydraulic oil. If hydraulic oil penetrates your skin, get medical help immediately.
INT-3-1-10/1

Maintenance

Daily

Visually check the hydraulic system for leaks. Immediately report any leaks to a superior for investigation and repair.

Visually check for obvious damage. Immediately report any leaks to a superior for investigation and repair.

Check all operations. Immediately report any leaks to a superior for investigation and repair.
DO not use the attachment if the operations are defective.

Oil all external pivots and linkages.

Clean the fresnel screen.

Weekly

Do daily jobs plus:

Grease all pressure points

Grease fork slide bars.

Check operation of fork locking device. Clean the area around the levers and plungers.

Check slide bars and forks for wear or damage. Replace as required.

Monthly

Do weekly jobs plus:

Check all screws, nuts, bolts and fixings for security.

HYDRAULIC TOOL CIRCUIT (H.T.C.)

To allow the use of hand held tools, the machine is fitted with a E.H.T.M.A. Class 'D' hydraulic circuit (30 litres/min at 138 bar), only tools to this standard should be fitted. Quick release couplings **A** and **B**, to which the tools connect, are mounted as shown in the illustration.

Except in an emergency, use the left hand door to enter or leave the cab when a hand held tool is connected.

⚠ WARNING

Hydraulic fluid at system pressure can injure you. Before disconnecting or connecting hydraulic hoses, stop the engine and operate the controls to release pressure trapped in the hoses. Make sure the engine cannot be started while the hoses are open.

INT-3-1-11/1

Connecting the Hand Held Tool

1 Park the machine on firm level ground, engage the parking brake and set the transmission to neutral. Lower the backhoe and loader end to the ground and stop the engine.

2 Make sure that the hydraulic tool circuit switch (item **C**) is in the OFF position.

⚠ CAUTION

The springs inside the couplings are strong. Considerable force is required to engage them. Ensure that the couplings have fully engaged.

2-4-1-16

⚠ WARNING

Ensure that the hydraulic tool circuit is disabled before connecting or disconnecting hydraulic hand held tool hoses.

2-4-1-18

3 Connect the hand tool quick release couplings to the machine couplings **A** and **B**. Refer to **Quick Release Couplings** in this section.

Operating the Tool

⚠ WARNING

Do not move the machine when the hydraulic tool circuit is in use.

2-4-1-17

1 Start the engine and use the hand throttle to increase the engine speed to 1500 r.p.m.

2 Press the hydraulic tool circuit enable switch (item **C**) to the ON position.

3 Operate the hand held tool in accordance with the relevant tool Operator Manual.

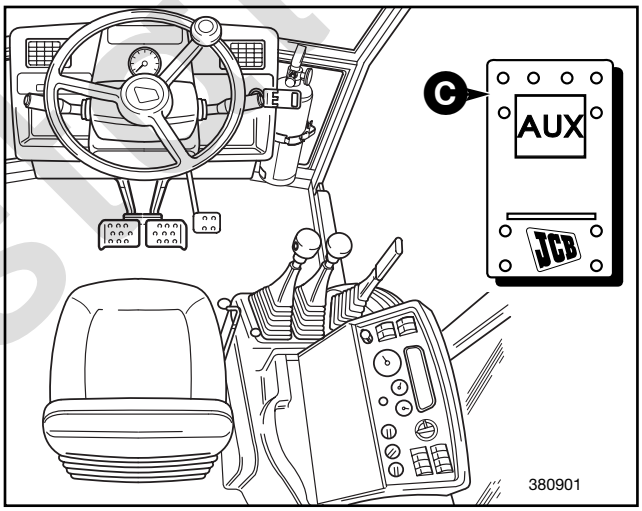

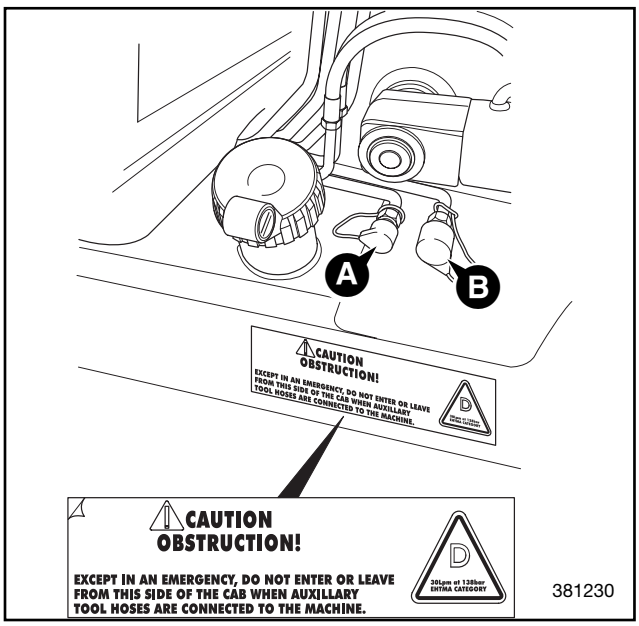

HYDRAULIC TOOL CIRCUIT (H.T.C.) (continued)

Disconnecting the Hand Held Tool

1 Make sure that the machine is parked on firm level ground, the parking brake engaged and the transmission in neutral. Lower the backhoe and loader end to the ground and stop the engine.

⚠ WARNING

Ensure that the hydraulic tool circuit is disabled before connecting or disconnecting hydraulic hand held tool hoses.
2-4-1-18

2 Disable the hydraulic tool circuit, make sure that the hydraulic tool circuit switch (item **C**) is in the OFF position and the engine stopped.

3 Operate the hydraulic hand tool a few times to release any pressure trapped in the hoses.

4 Disconnect the hand tool quick release couplings **A** and **B**.

5 Fit blanking caps to connectors.

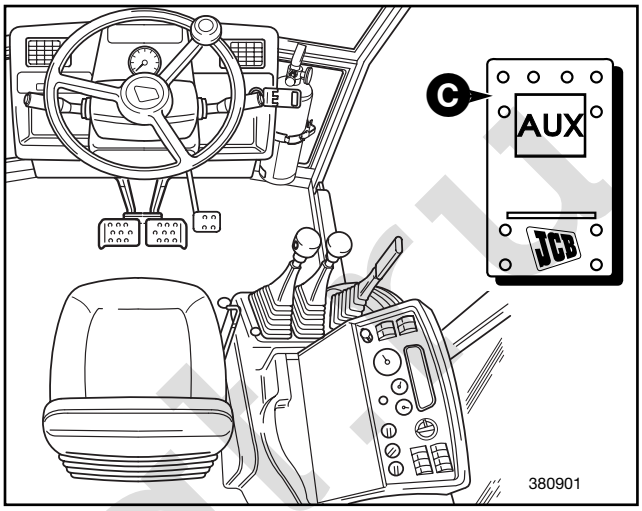

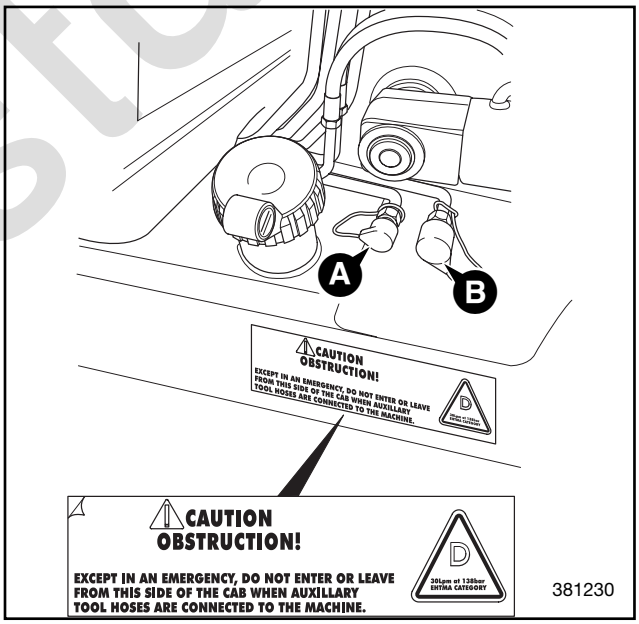

ANCILLARY EQUIPMENT

Stowage of Ancillary Equipment

The following attachments and ancillary equipment are designed for safe stowage on the machine during road/site travel and transport by vehicle trailer or air freight.
Hydraulic Loader Quickhitch
Dedicated Multi Purpose Shovel
Excavator Bucket
Sideshift Fork Carriage and Forks
Spare Wheel and Tyre
Tools Stowage Box
Detachable Cab Roof Section
Transport Frame

Important Note: The procedures given in this section are for stowage of attachments and ancillary equipment. The procedures are in addition to those given in *PREPARING THE MACHINE FOR TRAVEL and TRANSPORTING THE MACHINE (OPERATION section)* as applicable.

C130 Air Transport/Limited Cargo Space: When transporting by C130 aircraft, or where cargo space is limited, the excavator bucket must be removed and stowed inside the shovel, see ***Stowage - C130 Air Transport/Limited Cargo Space.*** In addition the detachable cab roof section must be removed, see ***DETACHABLE CAB ROOF SECTION, Removing, (OPERATION SECTION)***.

The safe transit of the load is the responsibility of the transport contractor and driver. Any machine, attachments or parts that may move during transit must be adequately secured.
5-2-5-9

Stowage - Equipment to Transport Frame

1 Stow and lash the spare wheel **A** and tools stowage box **B** on the transport frame **C**, as shown at **D**. Be sure to fully tighten the straps. Note that the spare wheel and tools stowage box are heavy and care must be taken when handling.

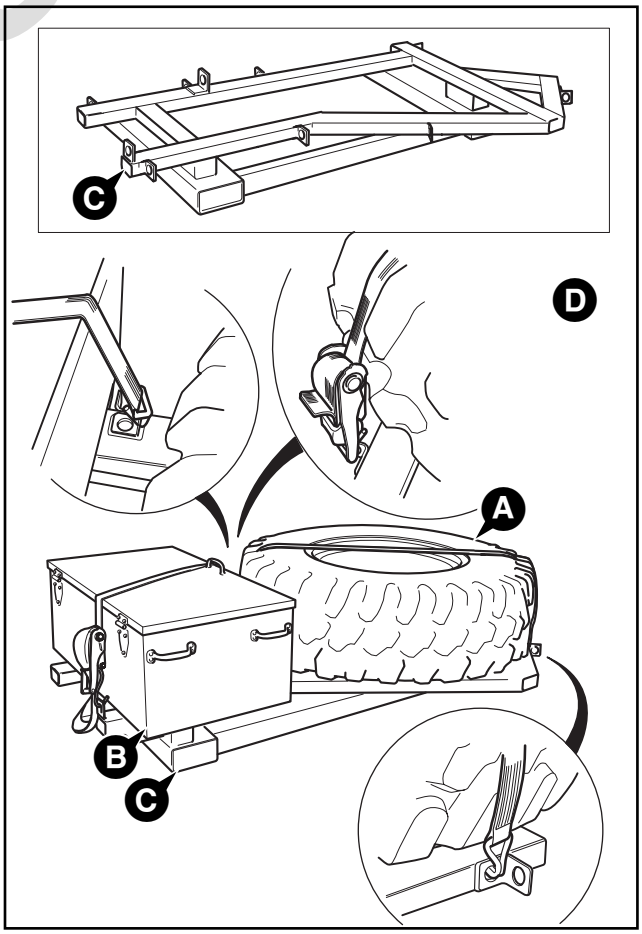

ANCILLARY EQUIPMENT (continued)

Stowage - With Multi Purpose Shovel

The following assumes that the hydraulic loader quickhitch is fitted to the machine.

1 Attach the multi purpose shovel to the loader quickhitch, see *LOADER QUICKHITCH*, ***Installing Loader Quickhitch Attachments***.

2 Manoeuvre the machine and engage the shovel in the transport frame **C** as shown at **E**.

3 Apply the parking brake, stop the engine and remove the starter key. Operate the loader controls to remove any trapped hydraulic pressure. Fit the two tie rods **F**, one at each side of the shovel. Engage one end with the hook on the transport frame and the other with the bracket on the shovel. Tighten the wing nut **G**, use a hammer to fully tighten. Lock the nut **G** by tightening locking nut **H**.

4 Remove the multi purpose shovel from the loader quickhitch, see *LOADER QUICKHITCH,* ***Removing Loader Quickhitch Attachments***.

5 Fit the sideshift fork carriage and forks, see *LOADER QUICKHITCH,* ***Installing Loader Quickhitch Attachments***. Set the forks to align with the transport frame pallet tubes **J**. Manoeuvre the machine and fully engage the forks with the transport frame as shown at **K**.

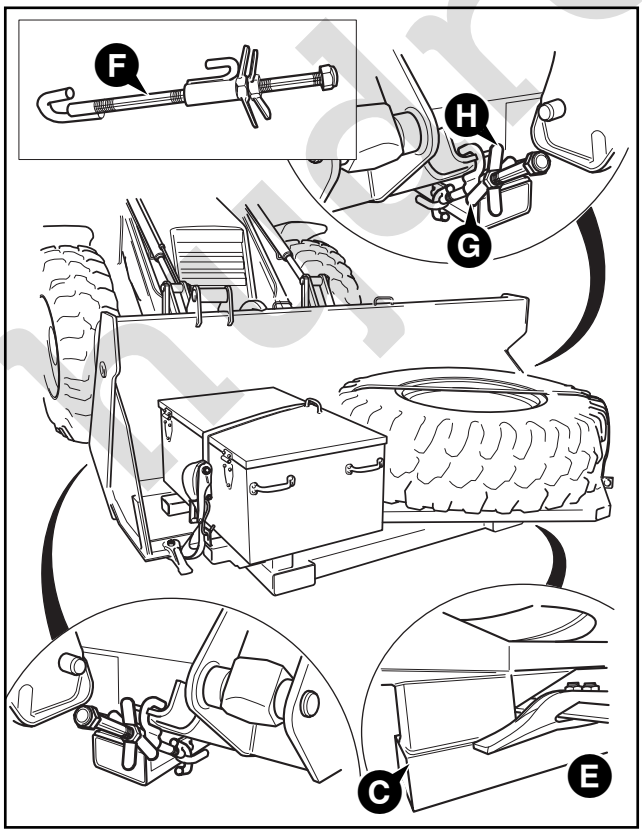

6 Lower the fork alignment tubes **M**.

7 Remove the adjustable links from their stowed positions and fit as shown at **L** (one at each side) and secure in position with locking pins. Shorten the links by turning the centre section, retaining the shovel and stowed equipment.

8 Before travelling or transporting the machine, check that all adjustable links, tie rods and lashings are fully tightened.

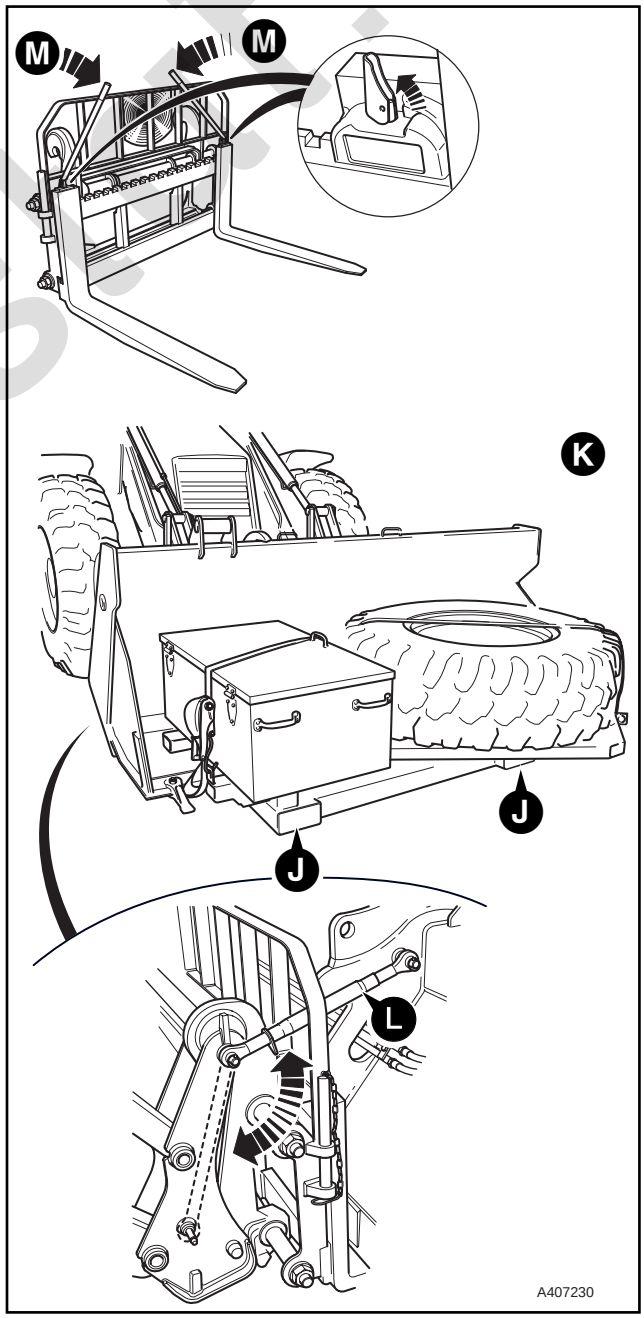

ANCILLARY EQUIPMENT (continued)

Stowage - Without Multi Purpose Shovel

1 Stow and lash the spare wheel **A** and tools stowage box **B** on the transport frame **C**, see ***Stowage - Equipment to Transport Frame***.

The following assumes that the hydraulic loader quickhitch is fitted to the machine.

2 Fit the sideshift fork carriage and forks, see *LOADER QUICKHITCH,* ***Installing Loader Quickhitch Attachments***. Set the forks to align with the transport frame pallet tubes **J**. Manoeuvre the machine and fully engage the forks with the transport frame **C** as shown.

3 Apply the parking brake, stop the engine and remove the starter key. Operate the loader controls to remove any trapped hydraulic pressure. Fit the two tie rods **F**, one at each side of the fork frame. Engage one end with the hook on the transport frame and the other with the fork frame. Tighten the wing nut **G**, use a hammer to fully tighten. Lock the nut **G** by tightening locking nut **H**.

4 Before travelling or transporting the machine, check that the tie rods and lashings are fully tightened.

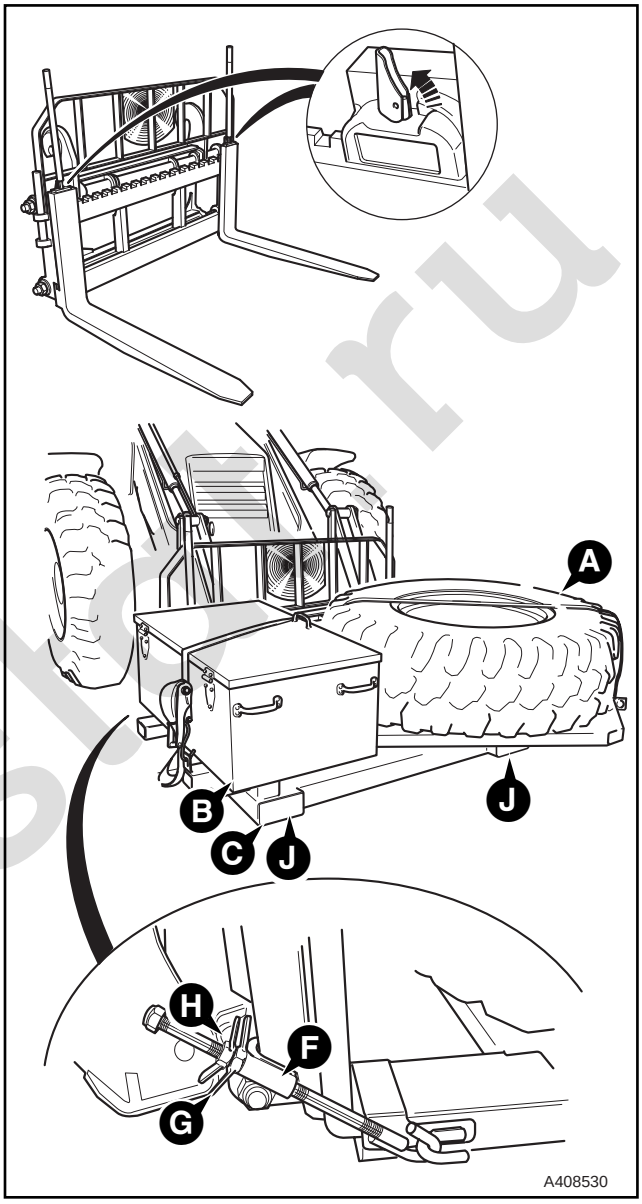

ANCILLARY EQUIPMENT (continued)

Stowage - C130 Air Transport/Limited Cargo Space

1 Stow the excavator bucket in the multi purpose shovel. With the shovel fitted to the machine, manoeuvre the machine and shovel to align with the bucket as shown at **A**. Attach the bucket to the shovel using the pin **B** and lynch pin **C**. Lift the shovel and retract the crowd rams to allow the bucket to swing inside the shovel.

2 Remove the detachable cab roof section **D**, stow together with the spare wheel, roof clamp bars and anciliary tool stowage box on the transport frame as shown at **E**. Use 3 straps to secure, one over the spare wheel, one over spare wheel and tool stowage box and one over the bucket.

3 Complete the stowage procedure as given in ***Stowage - With Multi Purpose Shovel***.

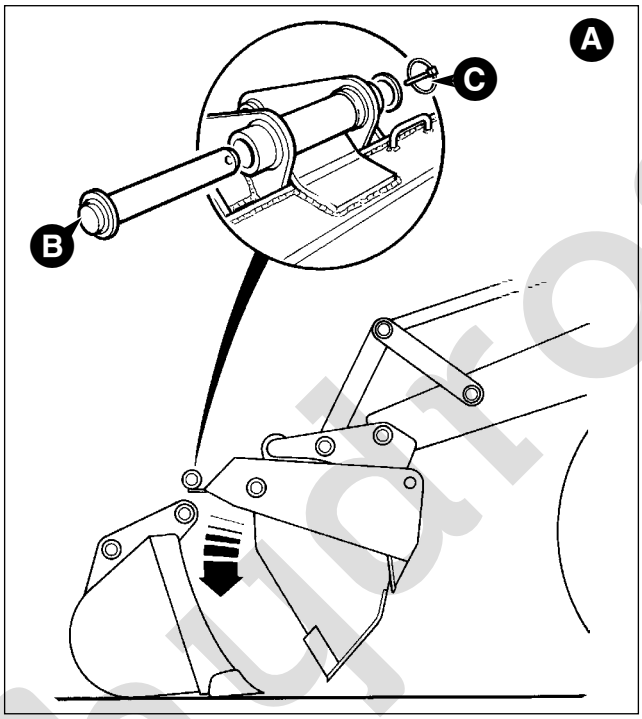

Removal of Stowed Ancillary Equipment

Removing stowed equipment is the reverse of the stowage procedures but note the following.

1 Park the machine on firm level ground. Lower the loader to the ground. Engage the parking brake and set the transmission to neutral.

2 Note that the spare wheel and tools stowage box must be man handled when removing. These items are heavy and care must be taken when handling.

3 When removing the excavator bucket from the shovel take care when extending the crowd rams to swing the bucket out of the shovel, the bucket can swing suddenly.

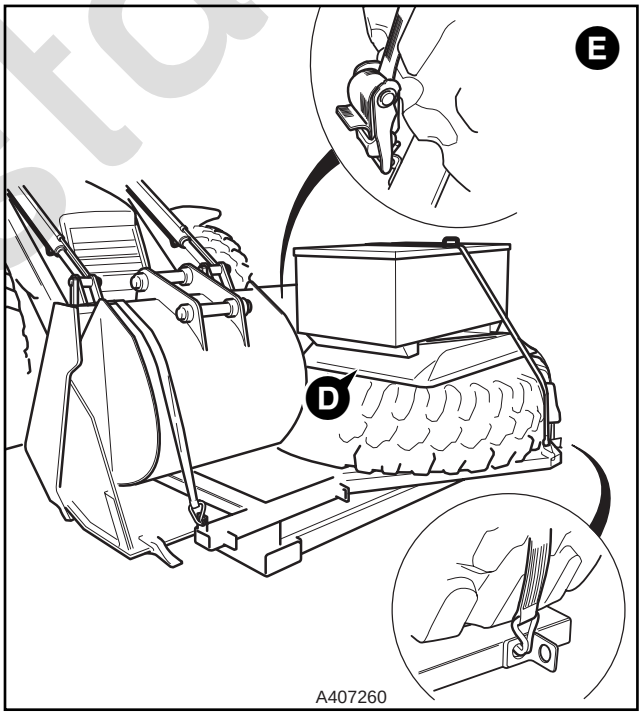

LASER LEVELLING EQUIPMENT

Installing the Laser Leveller

Note: Before attempting to install or use the laser leveller, read and understand the operator and installation documents supplied with the laser leveller machine. The procedures given here are in addition to those given in the applicable laser leveller manuals.

The laser levelling equipment is designed to mount on the loader using the loader quickhitch, see ***Installing Loader Quickhitch Attachments***, *LOADER QUICKHITCH (OPTIONAL ATTACHMENTS Section)* In addition to the procedures given in *Installing Loader Quickhitch Attachments* not the following:

1 When installing be sure not to trap the hydraulic hoses and electrical cables. The laser leveller is a hydraulic attachment, after installing on the quichitch connect the hydraulic hoses as described in ***Installing Loader Quickhitch Attachments*** step 7.

2 Make sure that the laser leveller attachment is lowered to the ground. Set the transmission to neutral and apply the parking prake**.** Stop the engine and remove the starter key. Operate the loader control lever to release any trapped pressure in the system.

3 Working inside the cab bolt the mounting bracket **A** to the cab 'B' post using the fixings provided. Fit the laser leveller control panels **B** to the bracket as shown.

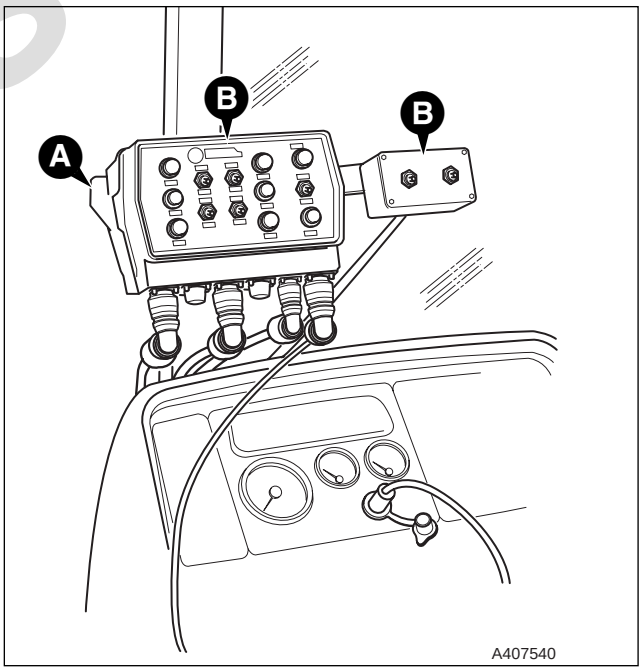

LASER LEVELLING EQUIPMENT (continued)

4 Prepare to route the leveller electrical cable **C** into the cab as follows; Remove the plastic cover **D**. Remove the silver kick strip **E**. Fold back the floor mat to reveal the cover plate **F**. Undo the securing screws and remove the cover.

5 Route the leveller electrical cable **C** along the loader arm and inside the cab through the cab floor at position **G**. Route the cable to the control panels **B**. Couple the various connectors as shown in the applicable laser leveller documents. Tie the cable **C** at intervals to the loader arm, make sure it cannot be trapped in the linkages. Make sure. that the cable in the cab is routed clear of the machine controls.

6 Couple the power cable to the auxiliary electrical socket **H**.

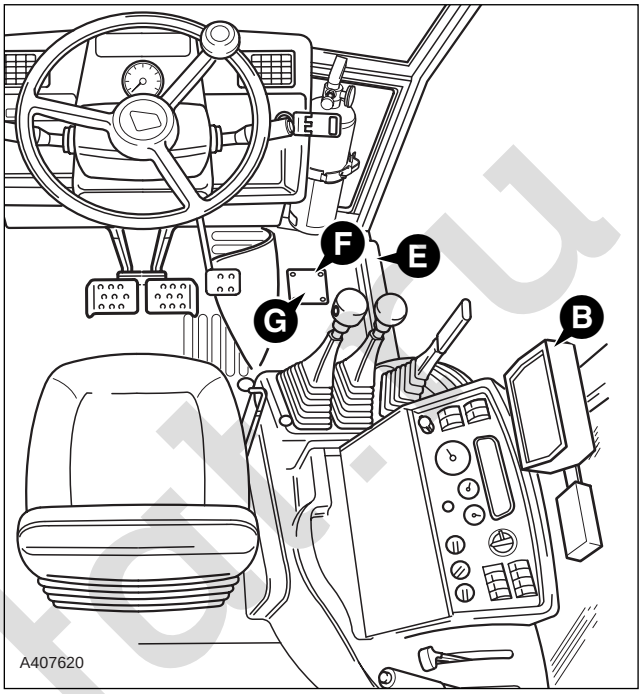

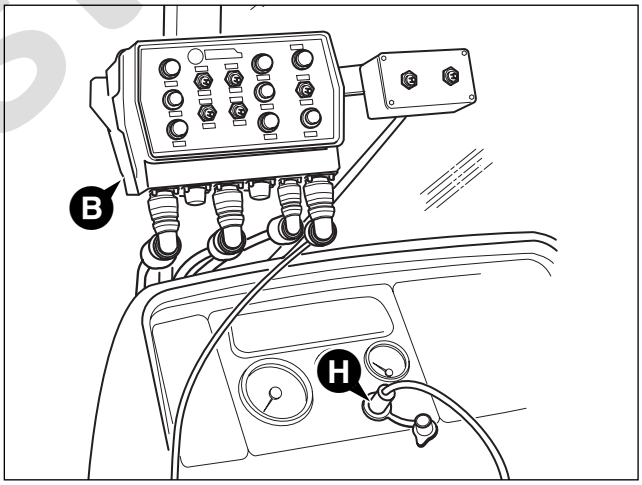

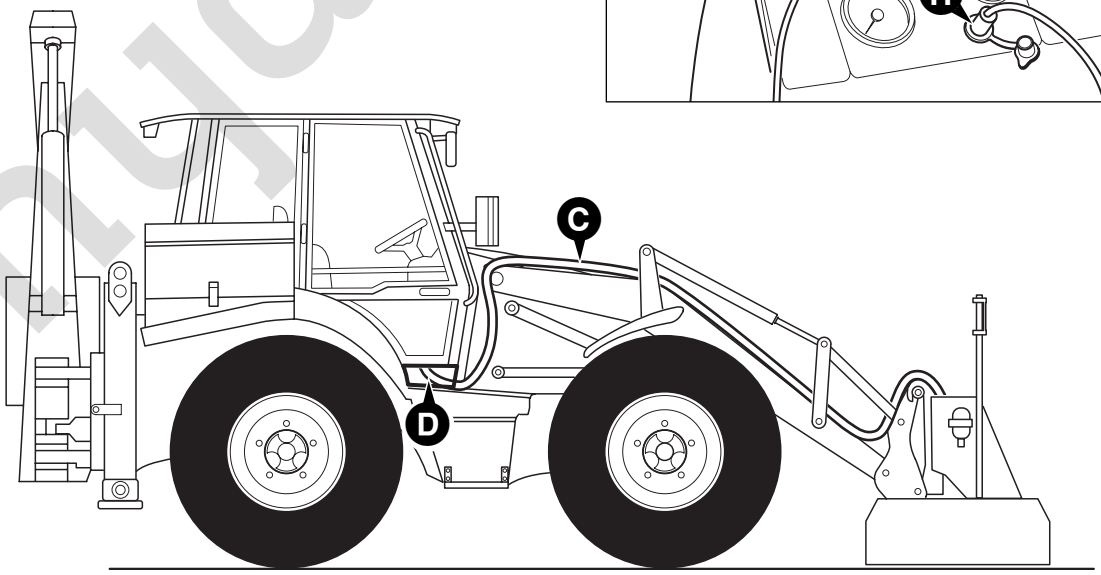

LASER LEVELLING EQUIPMENT (continued)

Using the Laser Leveller

Note: Before attempting to use the laser leveller, read and understand the operator and installation documents supplied with the laser leveller machine. The procedures given here are in addition to those given in the applicable laser leveller documentation.

When using the laser leveller note the following:

1 Before starting the engine make sure that the changeover valve is set to operate an auxiliary attachment, with the lever in position **B**

2 Set the hydraulic speed control system (HSC) to ON (switch **C** illuminated).

3 Make sure that the laser leveller is lowered to the ground and then select '**float**'. Push the loader lever **D** forwards as far as it will go. You will feel a slight pressure on the lever as it passes through the **lower** position.

4 Set the auxiliary control lever **E** to its '**detent**' position to enable the laser leveller hydraulic system. Push the lever forwards as far as it will go. You will feel a slight pressure on the lever as it passes through to the **detent** position.

5 When operating the leveller the loader control levers **D** and **E** must not be operated and remain in the positions described above. The laser leveller will not function correctly if the loader is operated during levelling operations.

6 If the loader arms need to be raised ie. when turning round, return lever B to the neutral position, switch off the hydraulic speed control system then raise the loader arms.

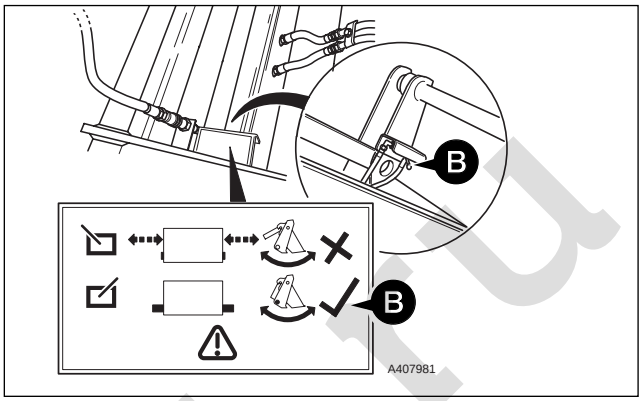

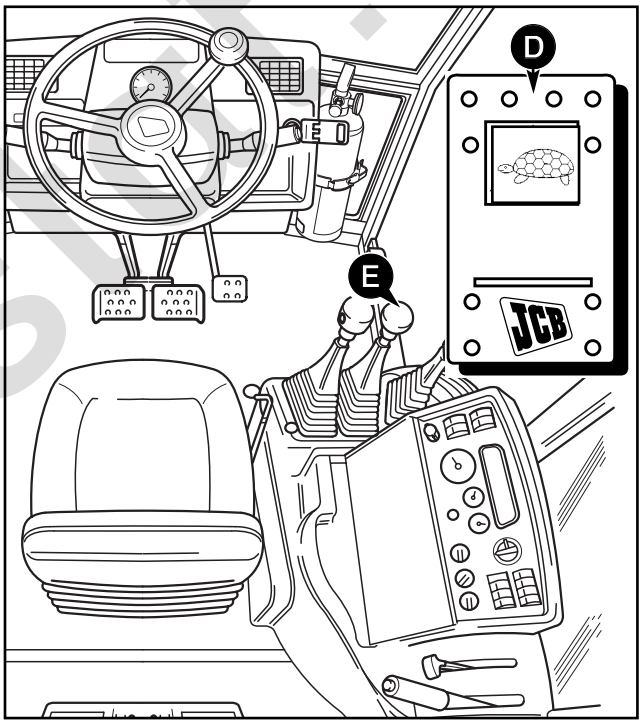

Removing the Laser Leveller

Removing the laser leveller is the reverse of installing but note the following:

1 Before removing the laser leveller from the quickhitch ensure that the electrical cable is disconnected at the control units in the cab and untied from the loader arm. Neatly coil the cable clear of the machine.

2 Remove the laser leveller from the quickhitch as described in ***Removing Loader Quickhitch Attachments***, *LOADER QUICKHITCH (OPTIONAL ATTACHMENTS Section).*

LASER LEVELLING EQUIPMENT (DUAL SLOPE TRANSMITTER)

1. Introduction

Safety Notice: The laser leveller is a class 1 infra -red invisible laser and is harmless to the eyes.

1.1 General

To enable you to use this leveller to your maximum satisfaction we strongly advise you to **read through and understand** these operating instructions carefully before you use it for the first time. Pay particular attention to the chapter on SAFETY.

Keep these operating instructions for future reference.

The leveller has been developed in cooperation with the most experienced specialists in the field of levelling. In so doing you benefit from all the experience that has been gained in the past few years in the field of levelling machines for rendering the relevant services. You can achieve the highest output at a minimum of costs.

LASER LEVELLING EQUIPMENT (DUAL SLOPE TRANSMITTER)

2. Safety

2.1 Explanation of Safety Terms/Symbols

Safety terms:

Danger: refers to serious to fatal injury resulting from failure to follow instructions;

Warning: refers to injury through not following instructions;

Careful: refers to damage to a leveller through not following instructions;

Attention: refers to possible problems through not following instructions;

Advice: gives the user advice.

Meaning of symbols applied:

RISK OF WOUNDING/INJURY:
Do not place your feet under the bottom knife of the leveller.

WARNING:
Remove all plugs from the laser system during welding work and/or use of starter cables.

PROHIBITED FOR CHILDREN:
Do not allow children near the leveller.

RISK OF INJURY
Stay at a safe distance from the leveller.

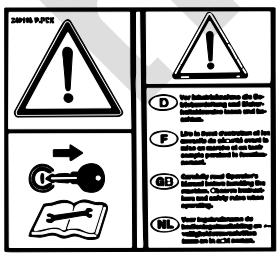

Left symbol:
Note:
Switch off the engine of the towing vehicle and remove the ignition key before carrying out maintenance.

Right symbol:
Note:
Read and follow operating instructions.

LASER LEVELLING EQUIPMENT (DUAL SLOPE TRANSMITTER)

DANGER/WARNING

- **Ensure that the leveller is installed, used and maintained by expert personnel.**
- **Follow all the operating instructions and safety regulations - Leveller / towing vehicle / laser equipment.**
- **The leveller may only be operated by persons over 18 years of age.**
- **The leveller is intended exclusively for levelling sandy soils.**
  - Consult your manufacturer/supplier if other types of soils are to be levelled;
  - Make sure that sandy soil is free from impurities such as gravel stone, concrete posts, etc.
- **It is prohibited for unauthorised persons to remain in the danger zone of the leveller whilst it is in use.**
- **Keep children, domestic animals and on lookers at a distance - a minimum of 6 metres - if necessary mark out the work area!**
- **Only mount the leveller on a towing vehicle that is operating safely (e.g. a shovel).**
  - Keep the work area / work site tidy and free of obstructions
- **Untidiness or obstructions can lead to accidents.**
  - Take environmental and weather influences into consideration.
  - Provide good lighting;
  - Do not use the leveller in an explosive environment;
  - Ensure proper ventilation in closed areas;
  - Do not use the leveller during snowfalls or during bad weather!
- **Concentrate**
  - Pay attention to the work at all times;
  - Use common sense when at work;
  - Do not use the leveller if you are not concentrating fully.
- **Never leave the leveller and towing vehicle unsupervised.**
  - Switch off the engine and remove the ignition key from the ignition lock.
- **Only use accessories or auxiliary parts which are described in the operating instructions.**
- **Always have damage repaired by an expert before using the leveller.**
- **Wear suitable work clothing.**
  - Do not wear any loose clothing, ornaments or jewellery as they may be caught in moving machinery.
  - Wear suitable safety devices to protect your eyes, ears, hands, feet and body.
- **It is prohibited to walk or remain near the leveller whilst it is in use.**
  - Only operate the leveller from the towing vehicle (e.g. shovel).
- **Be extra careful at work when using the leveller on a slippery or very steep surface.**
- **Keep away from ditches or raised embankments to prevent overturning**
- **Do not stick out hands or feet in or underneath rotating or moving machine parts**
- **Make sure that all protective covers etc. are closed during use.**
- **During work position the leveller on the ground and disconnect all power sources.**
  - Switch off the engine and remove the ignition key;
  - Disconnect the power supply plug;
  - Uncouple the hydraulic hoses (only uncouple if the system pressure on the pressure gauge indicates 0 bar);
  - Disconnect the laser system cables and battery cables if welding work is to be carried out on the towing vehicle or leveller.
- **Ensure safe transport**
  - Load the leveller with a fork lift truck or block and tackle weighing at least 2 tonnes onto and/or off the loading floor;
  - Lash the leveller securely to the loading floor.
- **Comply with the legal requirements if the leveller is transported on the public highway whilst being connected to the towing vehicle.**
- **Never carry out work on the leveller if it is being operated by someone else.**
- **Do not carry out any changes/modifications to the leveller without the written permission of JCB Service.**

CAUTION

- **The leveller is hardly ever 100% safe even if it stands unused in a corner.**
  - Hardly, because you could still knock against it.
- **If all parts of the leveller that could present a risk of injury are to be fully screened, the leveller would in that case no longer be fully functional. Therefore exercise caution!**
- **Only use the leveller for the purpose for which it is designed.**
  - Unsuitable use of the leveller may present a risk to people and machinery.
- **Do not force the leveller**
  - The leveller operates better and more safely under the specifications given.
- **Maintain the leveller carefully**
  - Follow the maintenance instructions in the directions for use carefully!
- **Check for damage before use.**
  - Before use check that the leveller is in order to ensure that it will operate properly.
  - In doing so check that:
  - The parts are correctly aligned and secured;
  - Everything is fully and correctly assembled.

LASER LEVELLING EQUIPMENT (DUAL SLOPE TRANSMITTER)

3. Product Information

3.1 Description

Product: **LEVELLER (tool)**
Type: ANK200 - ANK220 - ANK240 - ANK 270 - ANK300
Model: L / LZ / LZD / LZV / LZB / LVBV
CE number: 526

Application: The highly accurate manual or fully automatic levelling of sandy soils by means of laser control, e.g. subsoil for Stelcon slabs, paving work and screeds for concrete floors. The leveller is towed by an efficient vehicle (e.g. shovel), which is fitted with a coupler and hydraulic and electrical connections. The leveller is equipped with a double acting hydraulic system driven by a laser unit together with the operator on the towing vehicle. This takes place by means of the control box mounted in the towing vehicle.

Each leveller is delivered ready for mounting on your towing vehicle. Your leveller cannot therefore be mounted on another towing vehicle without problem!

3.2 Name of the Parts

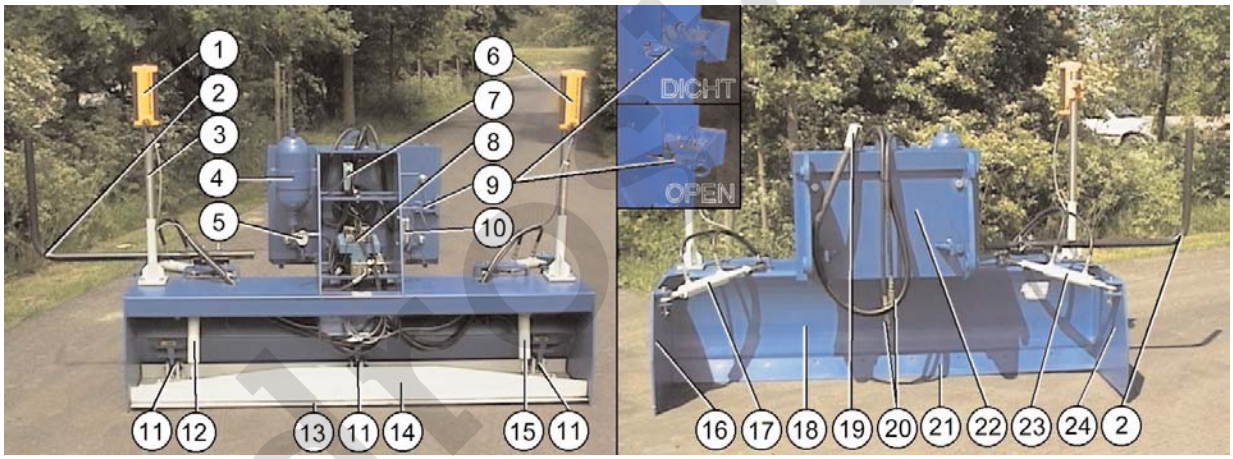

FIGURE 1: NAME OF THE PARTS

1: right laser receiver [1]
2. fastening support for Tracer [1]
3: receiver mast (2x)
4: accumulator battery
5: pressure gauge
6: left laser receiver [1]
7: pressure governor
8: hydraulic valve block
9. transport locking
10: wall socket for power plug
11: RAEX hinge pins for sole (3x)
12: right bottom cylinder
13: Hardox bottom knife (2x)
14: RAEX sole
15: left bottom cylinder
16: left door
17: left door cylinder [1]
18: levelling board
19: supply plug
20: hydraulic hoses
21: manganese steel lower knife
22: coupler
23: right door cylinder
24: right door

[1] If fitted

LASER LEVELLING EQUIPMENT (DUAL SLOPE TRANSMITTER)

3.3 Specifications

LEVELLER (tool)						
	Type	ANK200	ANK220	ANK240	ANK270	ANK300
Dimensions in mm	A	2000	2200	2400	2700	3000
(See Figure 2)	B	2010	2210	2410	2710	3010
	C	2070	2270	2470	2770	3070
	D	1580	1580	1580	1580	1580
	E	1185	1185	1185	1310	1310
	F	1270	1270	1270	1395	1395
	G	1030	1030	1030	1140	1140
Weight in kg	(Standard) model L	600	660	720	830	930
(excl. hydraulic components, assembled laser unit and other options)	model LZ	720	790	860	1020	1130
	model LZD	860	930	1000	1020	1270
	model LZV	760	830	ANK910	ANK1160	ANK1180
	model LZB	740	810	ANK880	ANK1040	ANK1150
	model LZBV	780	850	ANK930	ANK1090	ANK1200
Working width in mm	Closed doors	2000	2200	2400	2700	3000
	Open doors	2600	2800	3000	3300	3600
Supply voltage		12VDC or 24 VDC				
Hydraulic working pressure (range depends on type of towing vehicle)		min. 90 bar, max. 120 bar.				
Hydraulic flow (range depends on type of towing vehicle)		min. 20 litres/min., max. 100 litres/min.				
OPTIONS		• hydraulic doors • long receiver masts • manually adjustable sole (= V) • manganese steel lower knifes for doors • push plate (= D) • Hardox bottom knives (= Z) • wide superstructure (= B) • laser system: 2x R2S-S Laserplane ® receivers CB20TO-D dual Laserplane ® control box L1145-1E dual slope Laserplane ® transmitter Stand, elevating base, with stand legs L1275 detector SP-300-1 aluminium hand beacon Tracer with fastening support				

TABLE 1: SPECIFICATIONS

LASER LEVELLING EQUIPMENT
(DUAL SLOPE TRANSMITTER)

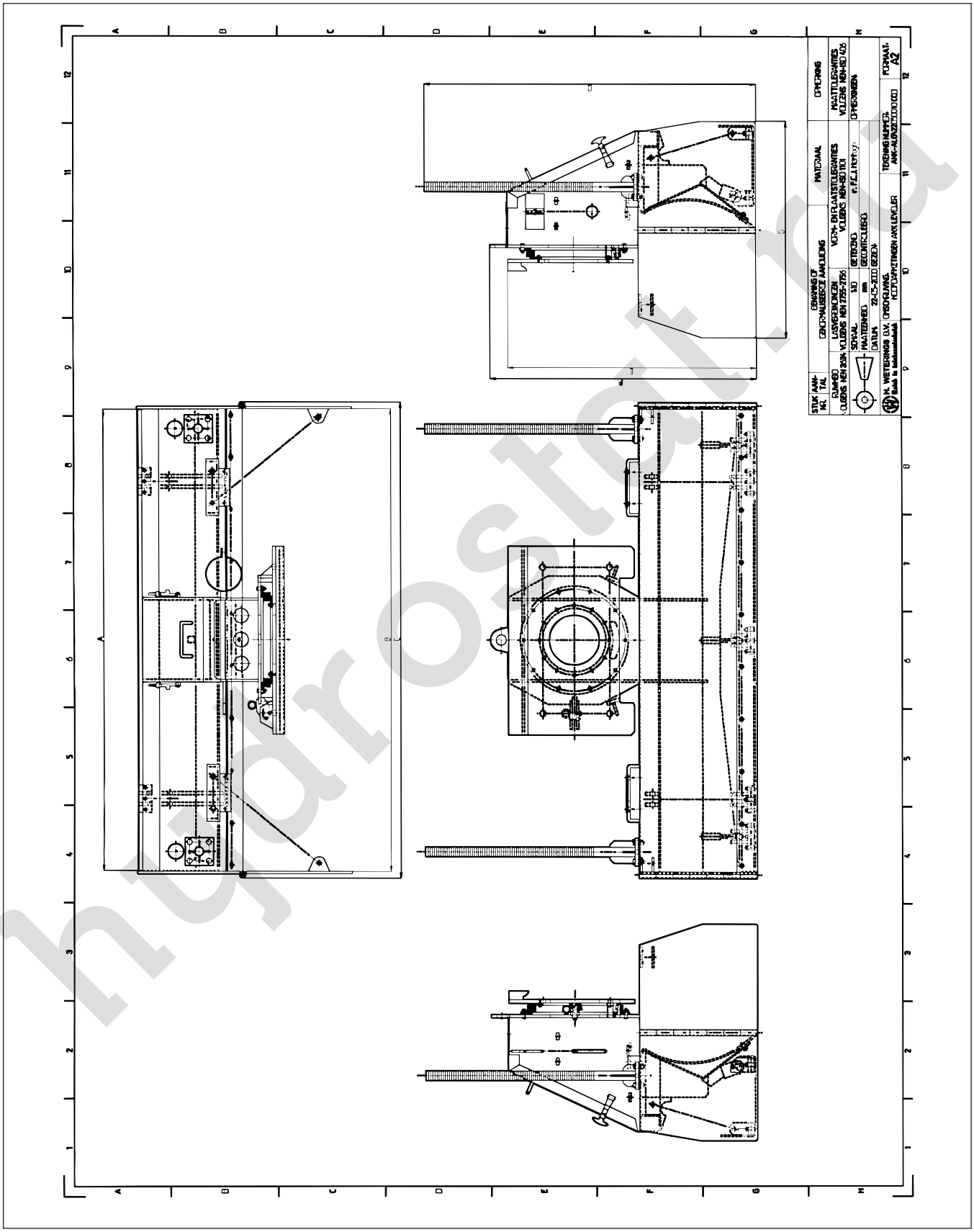

FIGURE 2: MAIN DIMENSIONS OF LEVELLER

LASER LEVELLING EQUIPMENT (DUAL SLOPE TRANSMITTER)

4. Preparation

When commissioning or after prolonged stoppage, the following must be inspected:

Carry out inspections if:
- **The leveller rests fully on the ground;**
- **The towing vehicle is out of operation;**
- **The power supply plug of the leveller has become disconnected;**
- **The hydraulic hoses have become uncoupled.** ***(only uncouple if the system pressure on the pressure gauge reads 0 bar!)***

Inspect the leveller thoroughly and remove all objects which do not belong to it;

Inspect the leveller for completeness and damage [2]
- Repair any damage.

Inspect the doors, manganese steel lower knife(ves), RAEX sole and Hardox bottom knives for wear and damage; [2]
- Repair any damage or replace if necessary. If a manually adjustable sole is provided, the wear on the manganese steel lower knife of the levelling board may be partially recorded as follows (see Fig. 3):
  1. Slacken *all* the locking bolts on the guides of the adjustable sole;
  2. Twist the spindles of the adjustable sole manually so that the manganese steel lower knife of the levelling board is about 1 cm lower than the RAEX sole or Hardox bottom knives;
  3. Retighten *all* the locking bolts on the guides of the adjustable sole.

Inspect all hydraulic hoses, pipes, connections and cylinders for oil leakages; [2]
- Repair any leakages.

Check that all the parts are correctly assembled and aligned; [2]

Check that all protective covers are fitted and sealed;

Check that the control box has been installed in the towing vehicle;

Inspect the rotary flange and coupler, with associated locking bolts and lock nuts, for completeness and damage; [2]
- Repair any damage

Inspect the operation of the transport locking mechanism (see Fig. 1, no. 9).

Note: In the case of any deficiencies in terms of the safety and reliability of the leveller, it must not be put into operation!

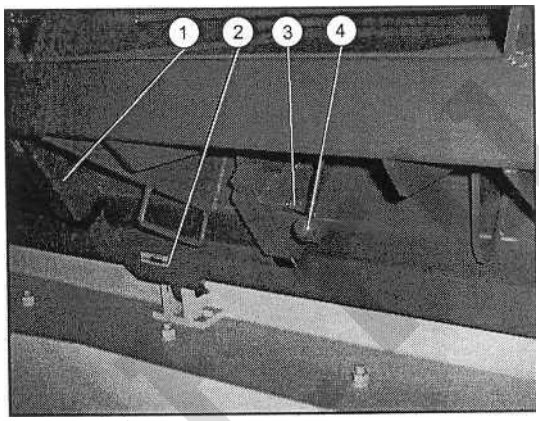

FIGURE 3: MANUALLY ADJUSTABLE SOLE

1 Spindle
2 Sole suspension
3 Locking bolt for guide
4 Handle

[2] See *Maintenance schedule*, 6.2

LASER LEVELLING EQUIPMENT (DUAL SLOPE TRANSMITTER)

5. Use

5.1 Assembly

- Fit the coupler on the quick change system of the towing vehicle;
- Start the towing vehicle according to the applicable operating instructions;
- Place the coupler of the towing vehicle under the projecting edge on the coupling plate of the leveller so that all the boltholes are opposite each other (see Figs. 1 and 4).

Note: Check that there is no sand or dirt between the coupler and coupling plate!

Note: If the coupler has already been secured to the coupling plate, the leveller can then be coupled by means of the quick-change system on the towing vehicle!

- Switch off the towing vehicle;
- Fit the locking bolts with associated lock nuts in all the bolt holes of the coupler;
- Connect the hydraulic pressure hose and return hose to the quick action closers on the towing vehicle;
- Insert the power supply plug in the wall socket on the towing vehicle.

Note: Before assembly, check that all the connections and/or quick action closers are clean!

Use the *non-pressurised* return connection of the towing vehicle

Check that the power cord and hydraulic hoses have no kinks!

In the case of deficiencies in terms of the safety and reliability of the leveller, the tool must not be used!

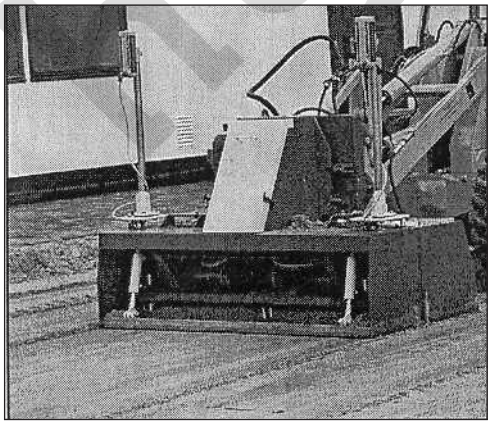

FIGURE 4: LEVELLER MOUNTED ON SHOVEL.

LASER LEVELLING EQUIPMENT (DUAL SLOPE TRANSMITTER)

5.2 Movement

- Check that the transport locking system is in the locked position;
- Start the towing vehicle according to the applicable operating instructions;
- Lift the leveller from the ground by means of the control handle on the towing vehicle;
- Transport the leveller according to the applicable operating instructions low above the ground onto or to the work site!
- Allow the leveller to drop gently down on to the ground and switch off the towing vehicle.

5.3 Adjusting the Laser Equipment

- Determine the best and safest position for erecting the laser transmitter and stand.

Note: Make sure that the laser beam cannot be broken by obstacles on the work site!

Check that the laser transmitter does not present an obstacle to other people in the immediate vicinity!

Follow *all* the instructions given in the operating manual for the laser unit!

- Place the laser transmitter on the stand and level it to the horizontal position, with the counter at 0.00, and allow it to rotate (see Appendix 3);
- Determine the levelling height using a manual beacon or detector;
- Place two stones, so-called “rests”, on the work site where the lower knife of the leveller is placed by means of the towing vehicle;

Note: Make sure that the leveller is horizontal. In doing so pay attention to the position of the receiver masts, which must be absolutely vertical!

- Fit both laser receivers onto the receiver masts and secure the associated power cords in the laser receivers (see Appendix 3);

Note: Check that both receivers are at the *same* height!

The receivers must be secured *at least* 10 cm below the upper edge of the receiver masts!

- Start the towing vehicle, switch on the control box and set *both* switches for the height adjustment of the leveller to manual;
  - The red power signal lamp comes on.

Note: If the leveller has been correctly connected, the hydraulic system pressure of the leveller must read between 90 and 120 bar after the towing vehicle is started and the control box has been switched on (working pressure range depends on the type of towing vehicle)

- Rotate the laser sender carefully upwards until the green signal lamps on the control box come on (see Appendix 3);
- Adjust the prescribed projection on the laser transmitter;

Note: Check that the projection is pointing in the right direction using the sight gauge (see Appendix 3)

Advice

Adjust the projection as follows:
projection in cm: length in metres = projection in % (adjustment)

<u>For example:</u>
5 cm : 50 metres = 0.1% (adjustment)
100 cm : 100 metres = 1% (adjustment)

- If necessary correct the height of the laser transmitter;
- Tilt the leveller from the rests, remove the rests from the work site and then allow the leveller to drop gently onto the ground;
- Set *both* switches for adjusting the height of the leveller to automatic.

LASER LEVELLING EQUIPMENT (DUAL SLOPE TRANSMITTER)

5.4 Levelling

- Release the transport lock and set the jig of the towing vehicle to “gliding position”;

- Level the subsoil of the work area by reversing the towing vehicle a few metres;
  - The orange signal lamps of the laser receivers on the control box flash in the case of minor corrections, and are continuously on if major corrections are made. If the green signal lamps come on, no corrections are made.

- With a hand beacon or manual detector check the levelling height and adjust the levelling height if necessary by adjusting the height of the laser transmitter;

CAUTION

Make sure that the sandy soil is free from contaminants such as gravel, stones, concrete piles, etc.!

Use the (hydraulic) doors only when the soil is being finely graded!

WARNING

Keep children, domestic animals and onlookers away from the site!

Before using the leveller for the first time, it is recommended that you carry out a practice run in a peaceful environment without onlookers or obstacles. The leveller has many facilities. This requires practice! Do not commence the actual levelling work until the operation of the leveller has been fully mastered.

5.5 Use of Tracer

The leveller can also be equipped with a no-contact sensor, called a Tracer. The tracer is mounted on one side of the leveller and replaces the corresponding receiver. The tracer is equipped with a sensor which is capable of following a surface, such as a wire, curb stone or edge stone. Proceed as follows if use is made of a tracer:

- Assemble the fastening support of the tracer on one side of the leveller;

- Assemble the tracer on the fastening support with the sensor pointing downwards and vertically above the surface to be followed;

Note: Make sure that the tracer is positioned far enough outside the leveller!

- Check that the distance between the tracer and the surface to be followed is a minimum of 30 cm and a maximum of 120 cm. It is advisable to maintain a distance of 50 cm;

- Secure the power cord, which is normally intended for the laser receiver, to the tracer;

- Follow 5.3 to set the laser unit, the tracer being used as a laser receiver. The tracer will be activated as soon as the control box is switched on;

Note: The tracer will follow what it first sees. By adjusting the height of the tracer on the fastening support, a different levelling height can be obtained!

- Now level the subsoil of the work site according to 5.4;

Note: If the distance from the reference point deviates more than 10 cm up or down, the tracer will indicate this as if the reference point has been removed , and all the orange signal lamps on the tracer light up. By switching the control box off and on again, a new reference point is obtained!

Note: If the distance between the tracer and the surface to be traced becomes too small for an accurate measurement (< 30 cm), the tracer will indicate by allowing all the signal lamps to flash slowly!

LASER LEVELLING EQUIPMENT (DUAL SLOPE TRANSMITTER)

5.6 Stopping and Disassembly

- Set the transport locking mechanism to the locking position;
- Switch off the control box;
  - The red power signal lamp goes out and the hydraulic system pressure in the leveller goes to zero.
- Place the leveller on a suitable flat, stable surface with the aid of the towing vehicle;
- Allow the leveller to drop gently and fully to the ground;
- Remove the power plug, roll up the power supply cord around the appropriate support and insert the plug in the wall socket on the leveller;
- Uncouple the hydraulic pressure hose and return hose and roll up the hoses;

WARNING

Only uncouple if the system pressure on the pressure gauge reads *0 bar*!

- Uncouple the leveller by means of the quick-change system on the towing vehicle;
- Reverse the towing vehicle and then switch it off;
- Remove both laser receivers, roll up the receiver cables and store the laser receivers in the protective boxes;
- Switch off the laser transmitter, remove the laser transmitter and stand and store the laser transmitter in the protective box;
- During prolonged stoppage cover the leveller with a tarpaulin, for example.

ATTENTION

In frosty weather place the leveller on a couple of wooden beams to prevent it freezing to the ground!

LASER LEVELLING EQUIPMENT (DUAL SLOPE TRANSMITTER)

5.7 Cleaning

WARNING

Do not clean until:
- **The leveller is resting fully on the ground;**
- **The towing vehicle is switched off;**
- **The power plug has been removed;**
- **The hydraulic pressure and return hoses have been uncoupled;**
- ***(only uncouple if the system pressure on the pressure gauge reads 0 bar!)***

Do not use aggressive detergents;
When spray cleaning never direct the jet directly onto bearing seals, the valve block, control box and other electrical components!

- Clean the leveller with water (use a high pressure cleaner if necessary);
- Make the stickers adhered to the leveller legible again (replace if necessary).

5.8 Transporting

The level may be transported in two conditions, namely:

1. In the unassembled condition:

- Use a 2 tonne pulley in which the hook is inserted in the lifting eye of the leveller, or use a 2 tonne fork lift truck to lift the leveller.
- Place the leveller on a vehicle designed for this purpose;
- Lash the leveller securely onto the vehicle;

WARNING

Allow for the capacity of the pulley/fork lift truck, as well as the weight and dimensions of the leveller!

2. In the assembled condition:

- Check that the transport locking mechanism is locked;
- Transport the leveller coupled to the towing vehicle low above the ground (see 5.2).

ATTENTION

When transporting the leveller on the public highway, the legal requirements should be complied with, among other things:
- **Switch on the flashing beacon and dipped beam on the towing vehicle;**
- **Fit the required lighting/marking according to the legal requirements;**
- **The maximum speed of travel is 10 mph.**

5.9 Safety Devices

Blow-off valve: If the electrical circuit of the leveller is switched off the hydraulic system pressure goes to zero (0 bar);

Pressure governor: The pressure governor ensures that the maximum system pressure does not exceed 120 bar. The pressure governor also ensures that the minimum system pressure is 90 bar when the electrical circuit is switched on.

LASER LEVELLING EQUIPMENT (DUAL SLOPE TRANSMITTER)

5.10 Problems/Causes/Solutions

	PROBLEMS	Possible CAUSES	SOLUTIONS
A	Placing lower knife flat too fast/too slow	Hydraulic flow set too fast / too flow.	Adjust the flow of the regulating valves in bottom cylinders on or off (see Appendix 1)
B	Lower knife does not go into the soil	Towing vehicle is not in floating position	Set towing vehicle to floating position.
		Transport locking mechanism is still locked.	Release the transport locking mechanism.
		Hydraulic hoses are not connected.	Couple up hydraulic hoses.
		Power plug is not connected	Connect power plug
		Control box is switched off.	Switch on control box.
		Switch(es) for height adjustment on the control box is (are) set to manual.	Set switch(es) for height adjustment on the control box to automatic.
		Laser receiver(s) is (are) not connected.	Connect laser receiver(s).
		Laser transmitter is switched.	Switch on laser transmitter.
		Manganese steel lower knife, RAEX sole or Hardox bottom knives are worn.	If present, set adjustable sole or replace if necessary.
C	Leveller corrects on wrong side (high/low, right/left)	Laser receiver(s) mounted upside down on receiver mast(s).	Reverse laser receiver(s)
		Power supply cords of laser receivers incorrectly secured.	Reverse power supply cords
D	Leveller leaves stripes behind on the levelled ground.	Manganese steel lower knife(ves), RAEX sole and/or Hardox bottom knives worn.	Replace lower knife(ves) and/or bottom (sole) knife(ves)
E	Towing vehicle has difficulty in moving leveller forward	Manganese steel lower knife worn.	Replace lower knife.
F	Hydraulic system does not get up to working pressure	Hydraulic hoses are not connected	Couple up hydraulic hoses
		Power supply plug is not connected	Connect power supply plug.
		Control box is switched off.	Switch on control box.
		Hydraulic function on towing vehicle is switched off.	Switch on hydraulic function.
		Suction or pressure filter in hydraulic system on towing vehicle is blocked.	Replace inner filter element.

TABLE 2: PROBLEMS, CAUSES/SOLUTIONS

ATTENTION

Contact your supplier if:
Faults occur which are not described in these operating instructions;
Problems arise.

LASER LEVELLING EQUIPMENT (DUAL SLOPE TRANSMITTER)

6. Maintenance

6.1 General

- Carry out maintenance according to the maintenance schedule, see 6.2.;

- Order replacement parts from JCB Service, and in doing so indicate the following:
  - product/type/model;
  - article number and name of part;
  - required number of parts;
  - method of dispatch.

ATTENTION

Have maintenance and repairs carried out by expert personnel;
Do not carry out maintenance until:

- **The leveller rests fully on the ground;**
- **The towing vehicle has been switched off;**
- **The power supply plug of the leveller has been removed;**
- **The hydraulic pressure and return hoses have been uncoupled; (*only uncouple if the system pressure on the pressure gauge reads 0 bar!)***
- **Carry out maintenance away from fire, sparks, etc.**

LASER LEVELLING EQUIPMENT (DUAL SLOPE TRANSMITTER)

6.2 Maintenance schedule

	What	When	How
1	Inspect hydraulic hoses, pipes, connections and cylinders for oil leakage.	Daily	Visually inspect for leakage and replace or repair if necessary.
2	Lubricate Grease nipples, see:	Daily	Lubricate all grease nipples using a grease gun filled with Mobilux EP 2 lubricating grease (carefully remove any grease that has escaped after lubrication).
3	Inspect manganese steel lower knife(ves) for wear.	Weekly	Replace lower knife(ves) if it (they) is (are) higher than the RAEX sole or Hardox bottom knifes. When replacing a lower knife place the leveller *firmly* on two wooden blocks ± 15 cm high. When fitting a new lower knife *always* use new fastening bolts and nuts according to the same specifications.
4	Inspect RAEX sole for wear. [3]	Weekly	Replace RAEX sole if less than 3 mm thick (= 50%). When replacing a sole place the leveller *firmly* on two wooden blocks ± 15 cm high. When fitting a new sole *always* use new fastening pins.
5	Inspect doors and, if present, Hardox bottom knife(ves) for wear.	Weekly	Replace doors and bottom knives if less than 50% thick. When replacing a bottom knife place the leveller *firmly* on two wooden blocks ± 30 cm high. When fitting a new bottom knife *always* use new fastening bolts and nuts according to the same specifications.
6	Tighten fastening bolts on rotary flange. [3]	Weekly	Tighten bolts using a torque wrench to a torque of 130 Nm.
7	Clean leveller.	Weekly	See 5.7.
8	Inspect the leveller for completeness and damage.	Monthly	Repair any damage before commencing work.
9	Check that all parts have been correctly assembled and aligned.	Monthly	Check that all the parts are operating (running) freely.

TABLE 3: MAINTENANCE SCHEDULE

ATTENTION

Contact your supplier if problems arise!

[3] See figure 5.

LASER LEVELLING EQUIPMENT (DUAL SLOPE TRANSMITTER)

6.2 Maintenance schedule (continued)

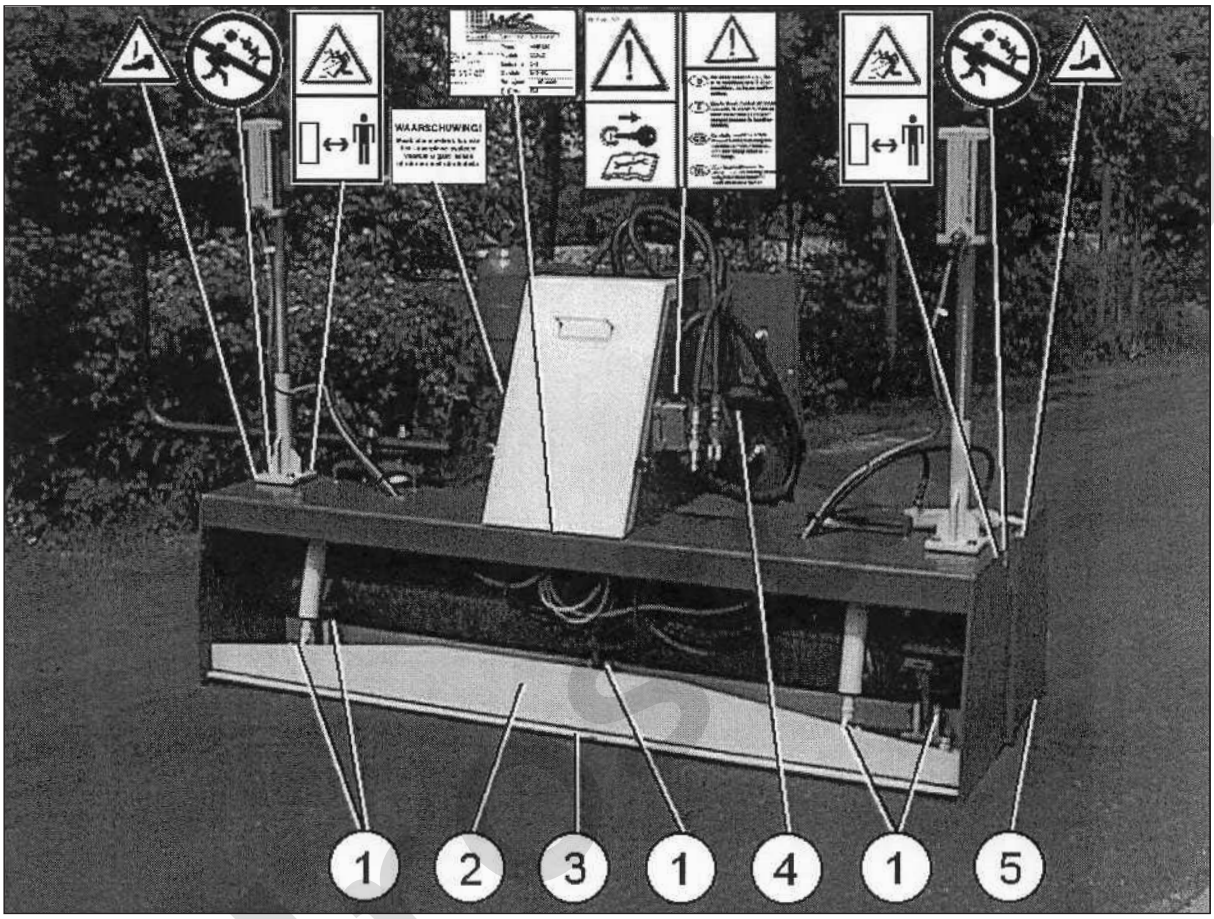

FIGURE 5

1 Fastening pins for RAEX sole and bottom cylinders
2 RAEX sole
3 Hardox lower knives
4 Fastening bolts on rotary flange
5 Door

LASER LEVELLING EQUIPMENT (DUAL SLOPE TRANSMITTER)

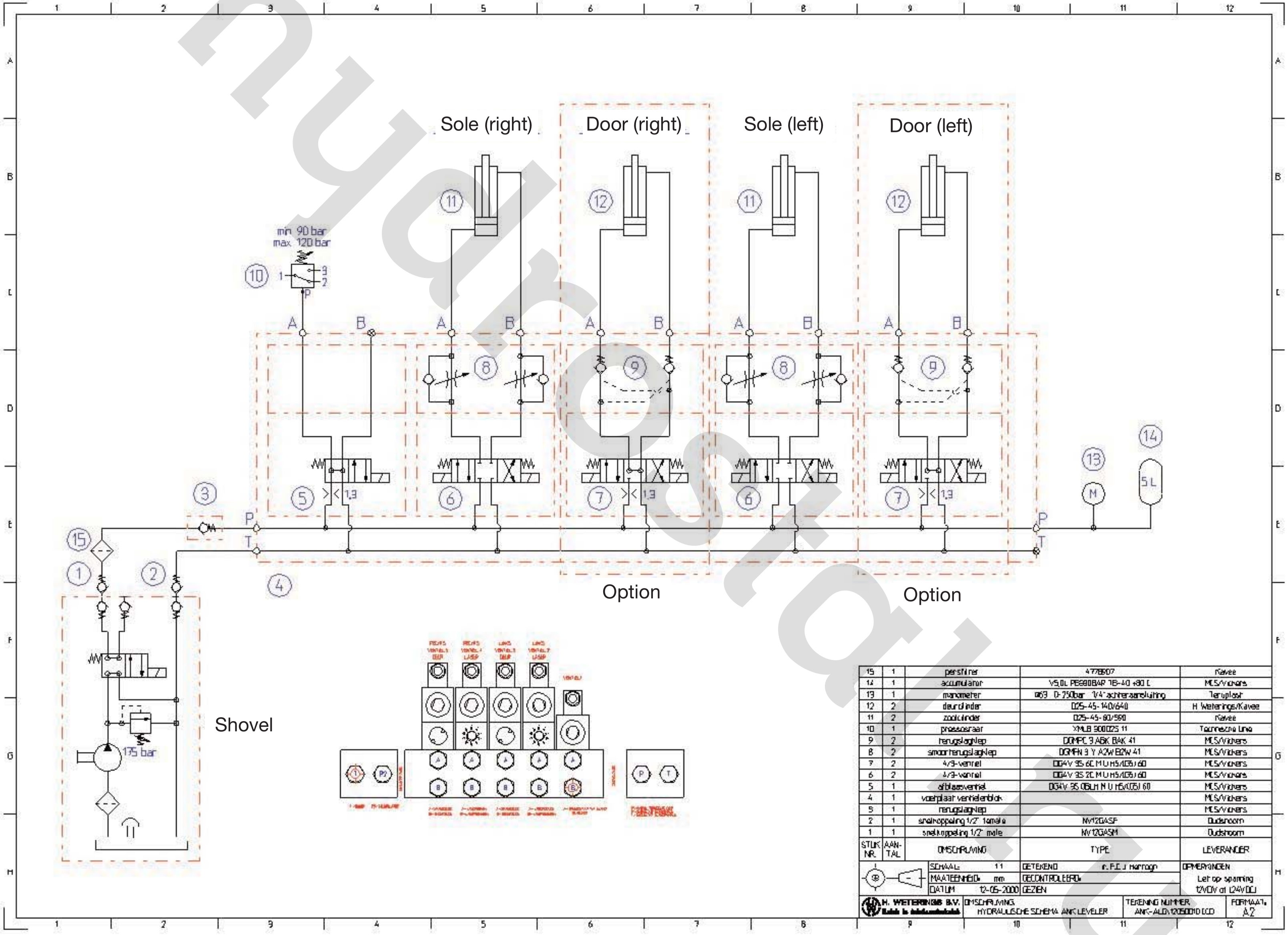

15	1	persfilter	4778607	Kavee
14	1	accumulator	V5,0L PE980BAR 7B-40 +80 C	MCS/Vickers
13	1	manometer	Ø63 0-250bar 1/4" achteraansluiting	Teruplast
12	2	deurcilinder	D25-45-140/640	H Weterings/Kavee
11	2	zoolcilinder	D25-45-60/590	Kavee
10	1	pressostaat	XMLB 300D2S 11	Technische Unie
9	2	terugslagklep	DDMPC 3 ABK BAK 41	MCS/Vickers
8	2	smoorterugslagklep	DGMFN 3 Y A2W B2W 41	MCS/Vickers
7	2	4/3-ventiel	DG4V 3S 6C M U H5/(D5) 60	MCS/Vickers
6	2	4/3-ventiel	DG4V 3S 2C M U H5/(D5) 60	MCS/Vickers
5	1	afblaasventiel	DG4V 3S 0BL M N U H5/(D5) 60	MCS/Vickers
4	1	voetplaat ventielenblok		MCS/Vickers
3	1	terugslagklep		MCS/Vickers
2	1	snelkoppeling 1/2" female	NV12GASF	Oudshoorn
1	1	snelkoppeling 1/2" male	NV12GASM	Oudshoorn
STUK NR.	AANTAL	OMSCHRIJVING	TYPE	LEVERANCIER

SCHAAL: 1:1
MAATEENHEID: mm
DATUM 12-05-2000
GETEKEND ir. F.C.J. Harrogn
GECONTROLEERD:
GEZIEN
OPMERKINGEN
Let op spanning 12VDC of 24VDC
H. WETERINGS B.V.
OMSCHRIJVING: HYDRAULISCHE SCHEMA ANK LEVELER
TEKENING NUMMER: ANK-ALD\12050010.DCD
FORMAAT: A2

FIGURE 6: HYDRAULIC DIAGRAM

LASER LEVELLING EQUIPMENT (DUAL SLOPE TRANSMITTER)

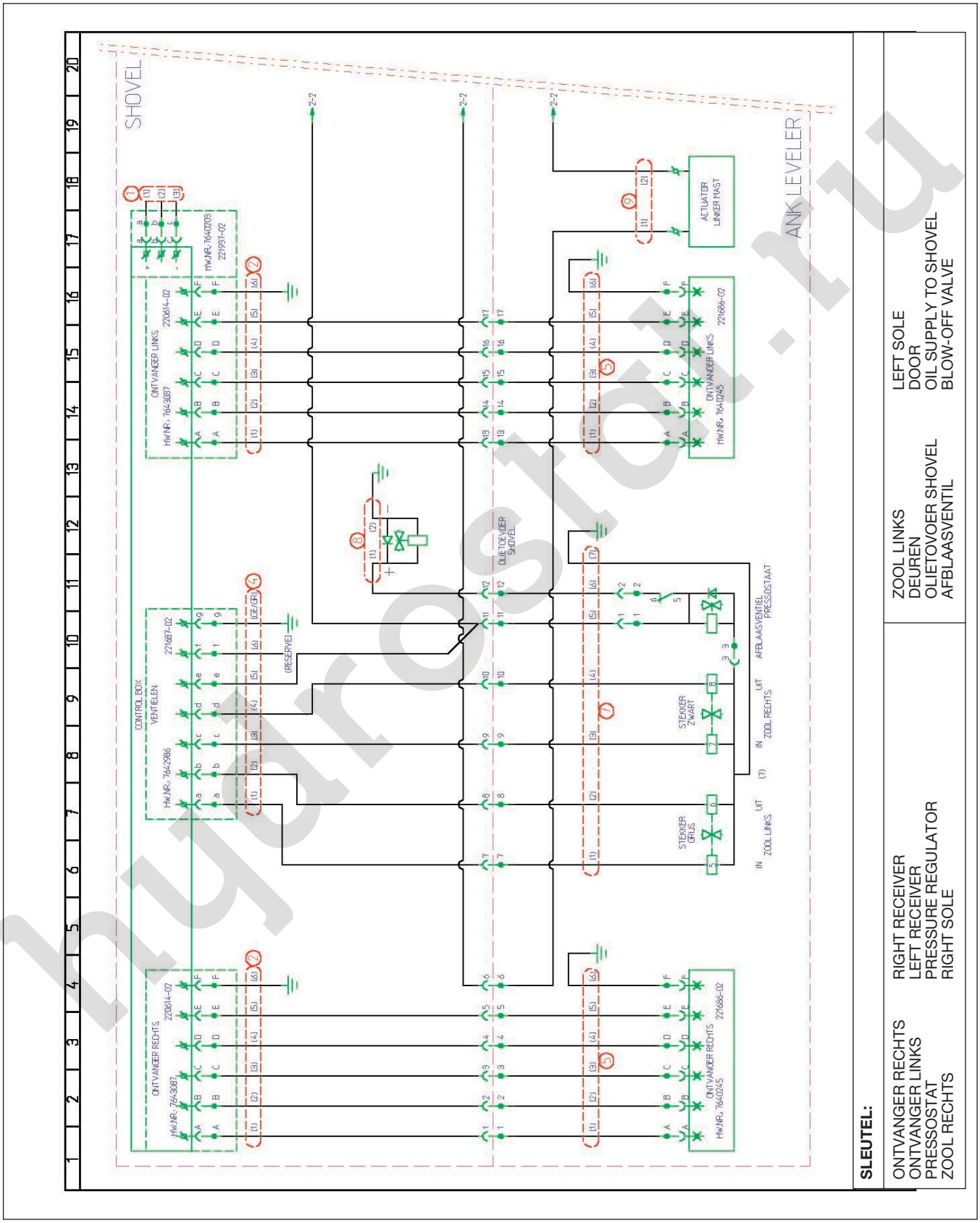

FIGURE 7: ELECTRICAL DIAGRAM

LASER LEVELLING EQUIPMENT
MODEL 1145 DUAL SLOPE TRANSMITTER

Description

The Model 1145 Laserplane® Machine Control Transmitter is an electronically self-levelling rotating laser unit that establishes a reference plane of laser light above the work area. The beam is an infrared laser produced by an internal battery powered gallium arsenide diode. The reference plane of laser light can be tilted from zero (0%) grade up to 9,99% grade in two axes that are orthogonal (90 degrees) to each other. The beam of light rotates at 600 RPM. The system self levels at any combination of grade settings preset by the user. If the Model 1145 is disturbed the laser beam shuts off until it has been relevelled.

Applications

The Model 1145 gives optimum performance when used in conjunction with the Laserplane family of detectors, machine control receivers, masts, control boxes and hydraulic systems. Dual slope grade reference is established for accurate surveying, grade and elevation control in compound grade applications. Typical applications include:

- Construction
- Agricultural Landlevelling
- Sub-surface Drainage
- Levee Contouring
- Mining

Features

1. MODEL 1145 LASERLEVEL electronically self-levels when it is rough levelled within +/- 5 degrees. The EARLY WARNING SYSTEM shuts off the laser beam if the transmitter setup is disturbed. The laser beam turns back on when it has relevelled.

2. BUILT-IN BATTERY provides up to 40 hours of continuous transmitter operation without re-charging.

3. DUAL GRADE INDICATORS for control of compound slopes have large numerals positioned at an angle so they can be read easily when the transmitter is mounted on tall tripods.

4. BOTTOM MOUNTING PLATE contains the bevelled mounting hole for the Quick Lock System on the Elevating Base and the locking mechanism on the Bucket Tripod.

5. CONTROLS AND INDICATORS are easily seen from the ground and give constant monitoring of the operating characteristics of the transmitter.

6. CARRYING HANDLE is used to transport the Model 1145 and mount it on its accessory tripod systems.

7. SIGHTING TELESCOPE permits precision alignment of a grade axis on a line when a Model 1145 is set up over a benchmark.

LASER LEVELLING EQUIPMENT
MODEL 1145 DUAL SLOPE TRANSMITTER

Operating Features

1. LASERLEVEL CONTROL SWITCH is used to establish the mode of operation you select when using the Model 1145. When the Control Switch is set to the AUTO position the electronic self levelling system is activated and the laser beam will not turn on until it is level. When the switch is set to the OFF/CHARGE position the system is shut off and the internal battery charging mode is activated. The units internal 6 VDC battery can be charged using either the 110/220 VAC Wall Outlet Charger or any fully charged 12 VDC truck or automobile battery. Simply connect the AC charger power cord or the 12 VDC power cord to the Power/Charge Connector and either power source will fully charge the 6 VDC internal battery overnight. Your vehicle will still start in the morning. When the LaserLevel Control Switch is set to the MANUAL position the Model 1145 remains in its last levelled position. The electronic self levelling system and early warning system is overridden so that the laser beam stays on no matter what position the outer housing of the LaserLevel may be set up in. This allows the Model 1145 to be manually adjusted into greater than 9,99% slopes in unusual steep slope conditions.

2. AUTO-LEVEL INDICATOR LAMP flashes when the Model 1145 is in the AUTO mode and the laser is out of level. It sops flashing when the electronic self levelling system has relevelled the laser beam. The lamp stays on solid when the transmitter is in the manual mode.

3. GRADE ADJUST KNOB for "Y" axis (Open Legged Triangle).

4. QUICK LOCK MOUNTING HOLE accepts locking mechanism on the Elevating Base Tripod and the "O-Ring" expansion lock mechanism on the Bucket Tripod Base.

5. STANDING FEET provide three-point contact when the Model 1145 is set on a flat surface such as a wall top or other setup where a tripod is not being used.

6. WARRANTY STICKER is a seal put over one of the hold down screws on the Bottom Mounting Plate to determine if unauthorised service has been performed on the unit.

7. BREATHER VENT facilitates rapid evaporation of any accumulated moisture caused when the Model 1145 passes through the dew point.

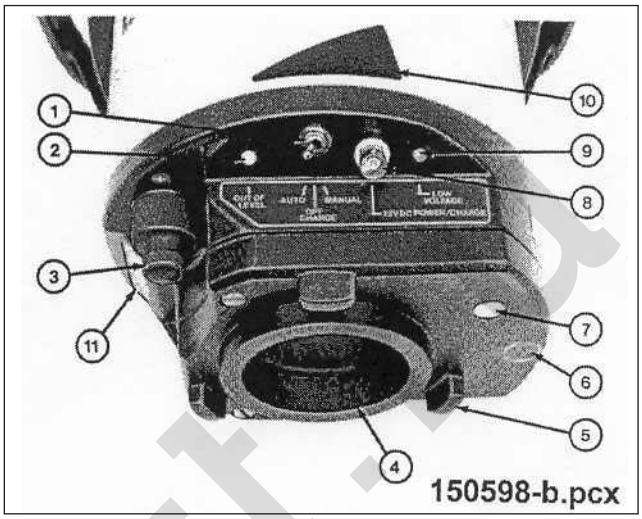

8. POWER/CHARGE CONNECTOR is the receptacle for all external connections to the Model 1145. When the LaserLevel Control Switch is in the Off/Charge position the internal 6 VDC battery charging circuit is activated. The internal battery can be charged from the 110/220 VAC Wall Outlet Charger, Vehicle Cigar Lighter Charging Cord or from a 12 VDC external vehicle battery. The 12 VDC charging options allow you to charge the 6 VDC LaserLevel internal battery from your truck battery on remote job sites where AC electrical power is not readily available. Maximum charge and longest battery life occurs when the internal battery is charged frequently between +60 F and + 90 F.

9. LOW VOLTAGE INDICATOR LAMP is a red LED miniature warning lamp that flashes when the 6 VDC internal battery falls below safe operating voltage. When the 1145 LaserLevel is hooked up to a 12 VDC external battery the Low Voltage Indicator Lamp stays on continuously to warn that the external battery has discharged below safe operating voltage. When the Low Voltage Indicator Lamp comes on the laser beam automatically shuts off and the Rotor Pentamirror Assembly stops rotating.

10. "X" AXIS INDICATOR is solid triangle on two sides of the Model 1145 case 180 degrees apart. The "Y" AXIS INDICATOR is an open legged triangle that shows the orientation of the opposite orthogonal axis.

11. GRADE COUNTER WINDOW has large numerals, decimal point and grade reading indicator. The windows are tilted downward at an angle so that grade readings are easily visible from the ground even when the tallest tripod legs are used.

LASER LEVELLING EQUIPMENT
MODEL 1145 DUAL SLOPE TRANSMITTER

Grade Axis Orientation

"X" AXIS GRADE ADJUST KNOB showing the position of the Grade Adjust Knob, Grade Counter Window and the "X" Axis Solid Triangle on the Laserlevel case.

"Y" AXIS GRADE ADJUST KNOB showing the position of the Grade Adjust Knob, Grade Counter Window and the Open Legged "Y" Axis Triangle on the LaserLevel case.

The Model 1145 Dual Slope Laser has two grade axes that are marked and . When entering the desired grade into the rotating beam, the grade axis must be aligned in the direction of the desired slope. This is accomplished by sighting through the telescope mounted on top the LaserLevel. When one grade axis is on the desired line, using a plumb bob under the Model 1145 and the Sighting Telescope, the opposite axis will be orthogonal (90 degrees) from the prealigned axis. The large solid and opened legged triangles painted on the side of the LaserLevel case indicate the UP SLOPE and DOWN SLOPE direction.

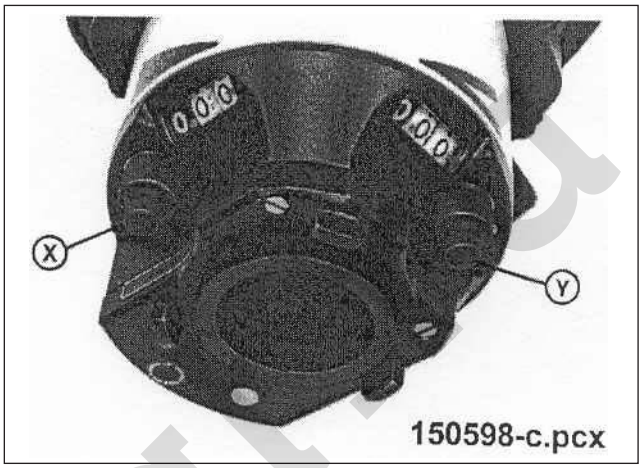

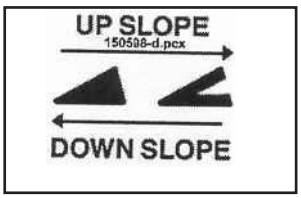

SPECIFICATIONS			
SIZE	10,62 x 9,06 x 14,20 (27,0 x 23,0 x 30,0 cm)	LEVEL ACCURACY	3/32 inch per 100 ft. (2,4 mm per 30 metres) at standard atmospheric conditions.
WEIGHT	19 lbs. (8,6 kg)	GRADE RANGE	up to 9,99% in divisions of 0,01%
ELECTRICAL INPUT	6 VDC 12 ampere hour (internal battery) 12 VDC (external power only)	SELF-LEVELLING RANGE	+ /- 5 degrees at any grade setting
BATTERY OPERATING TIME	40 hours	LEVEL DISTURB DELAY	5-8 seconds
TEMPERATURE (AMBIENT)	-20 F to 120 F operating -40 F to 140 F storage	POWER OUTPUT	1,6 mw +/- 0,5 mw (BRH class 1)
ENVIRONMENTAL	water and dust resistant	The model 1145 is designed for use with the Bucket Tripod Base and the Elevating Base. Both of these tripod bases use Laserplane tripod leg sets.	
OPERATING RANGE	1000 ft. (300 metres)		
TRANSMISSION SECTOR	360 degrees		

LASER LEVELLING EQUIPMENT
MODEL 1145 DUAL SLOPE TRANSMITTER

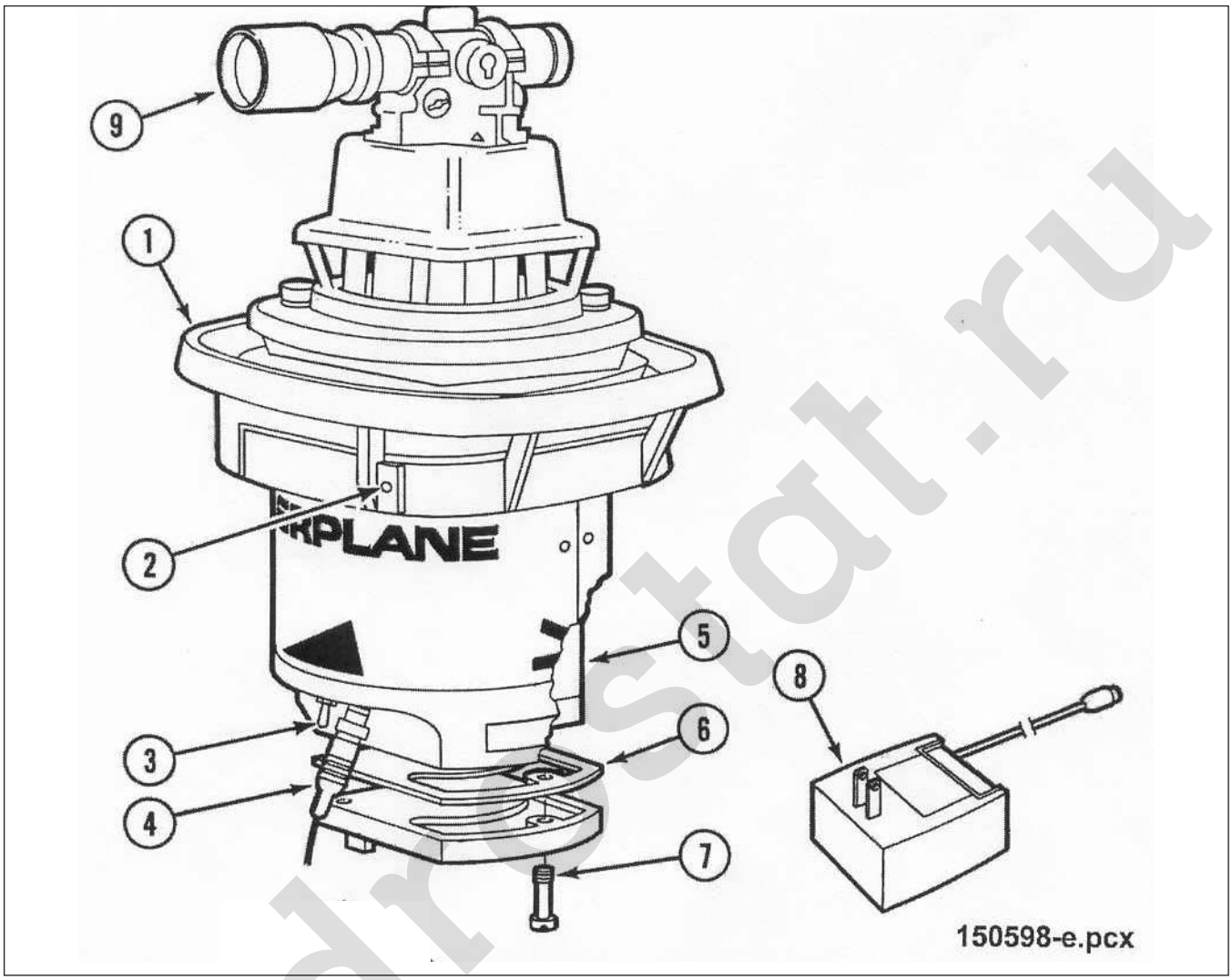

FIGURE & INDEX NO.	DESCRIPTION	UNITS PER ASSEMBLY
1.	Handle, Carrying	1
2.	Set Screw, Carrying Handle	4
3.	Switch, Mode Selector	1
4.	Power Cord, 12 VDC	1
5.	Battery, 6 VDC	1
6.	Gasket, Base Plate	1
7.	Screw, Base Plate	3
8.	Battery Charger, 110 VAC Battery Charger, 220 VAC	1
9.	Sighting Scope, Pistol Sighting Scope, Rifle	1

LASER LEVELLING EQUIPMENT
MODELS 408700-03, -04 ELEVATING BASE

Description

The Elevating Base provides a telescoping fine height adjustment, and a locking quick release for the Laserplane™ Transmitters.

Applications

The Elevating Base is used in conjunction with the Laserplane™ Tripod Legs for stable mounting of the Laserplane™ Transmitters. The Elevating Base is used for all Machine Control applications.

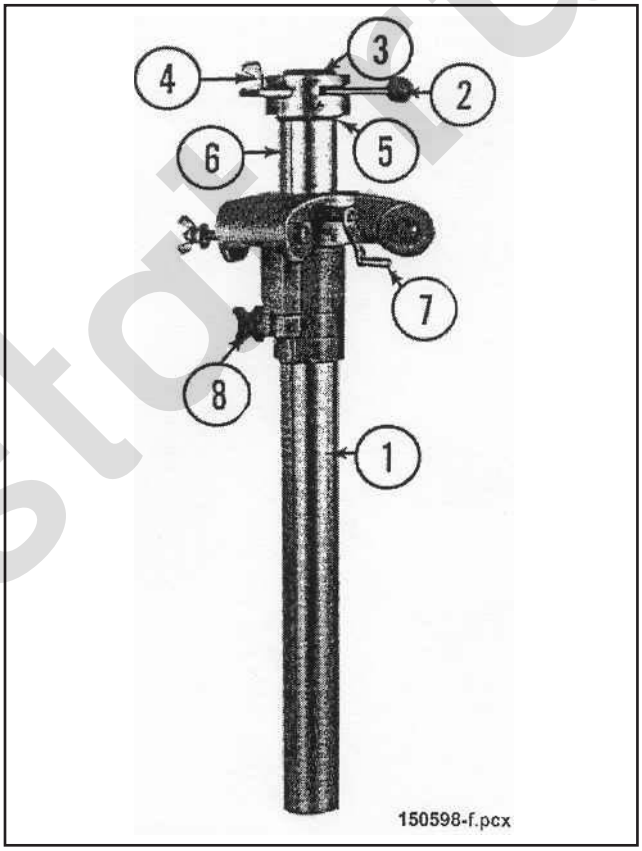

Features/Function

1. Elevating Column - This telescoping column provides for fine height adjustment of the Laserplane Transmitters.
2. Quick Release Lever - Allows fast and easy laser transmitter setup.
3. Locking Ring - This durable plastic ring is set on an eccentric which enables the transmitter to fasten to the elevating tripod base.
4. Hairline Indicator - Provides a reference point for determining the degree of transmitter rotation.
5. O-Ring Stop - Helps prevent damage to the elevating tripod base when the elevating column is lowered.
6. Steel Rack - This gear rack incorporates a graduated scale to allow precise movement of the elevating column.
7. Raise/Lower Crank - Used to move the base up or down. It incorporates an adjustable locking mechanism to prevent the transmitter from dropping if the tube clamp is not secured.
8. Clamping Knob - Used to clamp the elevating column in position.

SPECIFICATIONS	ENGLISH MODEL 408700-03	METRIC MODEL 408700-04
SIZE	0,0H x 35,3W x 10,0D inches	25,4 x 89,7 x 25,4 cm
WEIGHT	15 lbs.	6,75 kg
HEIGHT ADJUSTMENT RANGE	2 ft.	60 cm
ADJUSTMENT ACCURACY	0,01 ft.	3 mm

LASER LEVELLING EQUIPMENT
MODELS 408700-03, -04 ELEVATING BASE

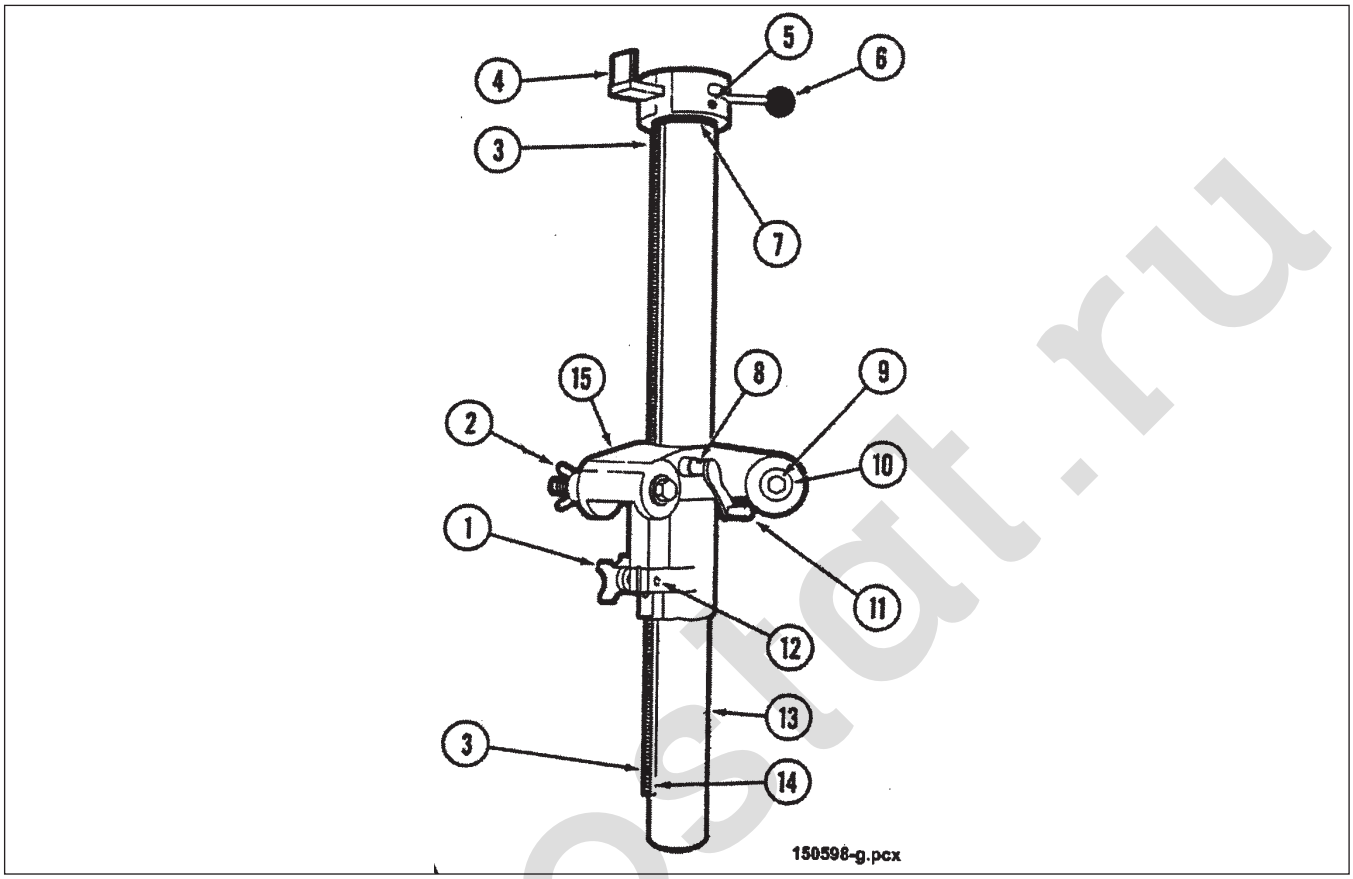

FIGURE & INDEX NO.	DESCRIPTION	UNITS PER ASSEMBLY
1.	Stud, Locking Assy.	1
2.	Nut, Wing ½-13	3
3.	Screw, Cap. Soc. Hd. SST 8-32x½	2
4.	Indicator Hairline Screw, Hairline Indicator 4-40x7/16	1 2
5.	Screw, Mach. Fl. Hd. Phil. SST 10-32x7/8	3
6.	Knob, Quick Release Mechanism	1
7.	O-Ring 01-334	1
8.	Pin, Roll SST 3/32x¾ Lg.	1
9.	Screw, Hex Alum. ½-13x6	3
10.	Washer, Fl. Alum. ½	6
11.	Crank, Tripod	1
12.	Screw, Rd. Hd. Phil SST 10-32x3/8	1
13.	Tube, Quick Release Mtg. (Inch) Tube, Quick Release Mtg. (Metric)	1 1
14.	Rack, Scaled Gear (Inch) Rack, Scaled Gear (Metric)	1 1
15.	Base, Elevating Tripod	1

LASER LEVELLING EQUIPMENT
MODELS 302612-02, -03, -04, -05, -06 TRIPOD LEGS

Description

The Tripod leg set consists of three wooden legs. These legs are attached to the elevating base to support and position the transmitter at a desired height. Coarse height adjustment is achieved with the leg extensions.

Applications

The Tripod leg set is used in conjunction with the elevating base to provide a sturdy mount for transmitters. Different lengths are available to meet specific application requirements. The shorter legs are primarily used for surveying applications. The longer legs are used in Machine Control applications to raise the laser reference plane above the equipment.

Features/Function

1. Tripod Legs - Constructed of sturdy hardwood with spar varnish finish.
2. Chains - Connect to the tripod legs to prevent slippage of the legs on a hard surface.
3. Leg Extensions - Provide for coarse height adjustment of 2 feet. Located in the end of the leg with foot pads for pushing the pointed leg into the ground.
4. Leg Clamp - Tightens the tripod leg extension in place after coarse height adjustment.

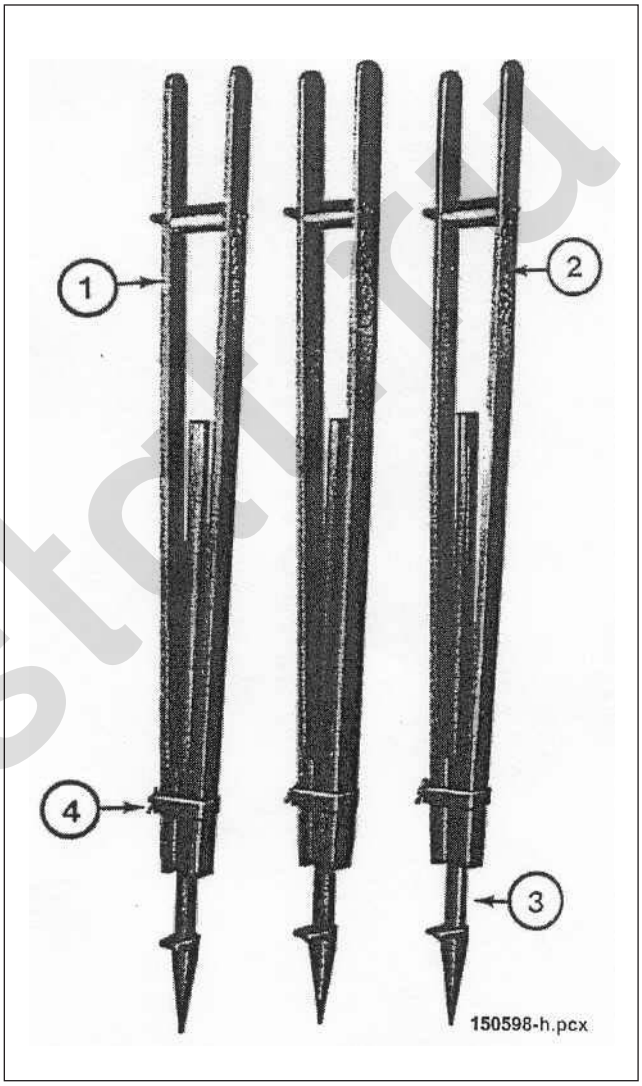

SPECIFICATION		
MODEL NUMBERS	HEIGHT	WEIGHT
302612-02	4 ft. (1,2 m)	16,5 lbs. (7,5 kg)
302612-03	6,5 ft. (2,0 m)	25 lbs. (11,3 kg)
302612-04	8 ft. (2,4 m)	27 lbs. (12,2 kg)
302612-05	9 ft. (2,7 m)	32 lbs. (14,5 kg)
302612-06	10 ft. (3,0 m)	40 lbs. (18,1 kg)

LASER LEVELLING EQUIPMENT
MODELS 302612-02, -03, -04, -05, -06 TRIPOD LEGS

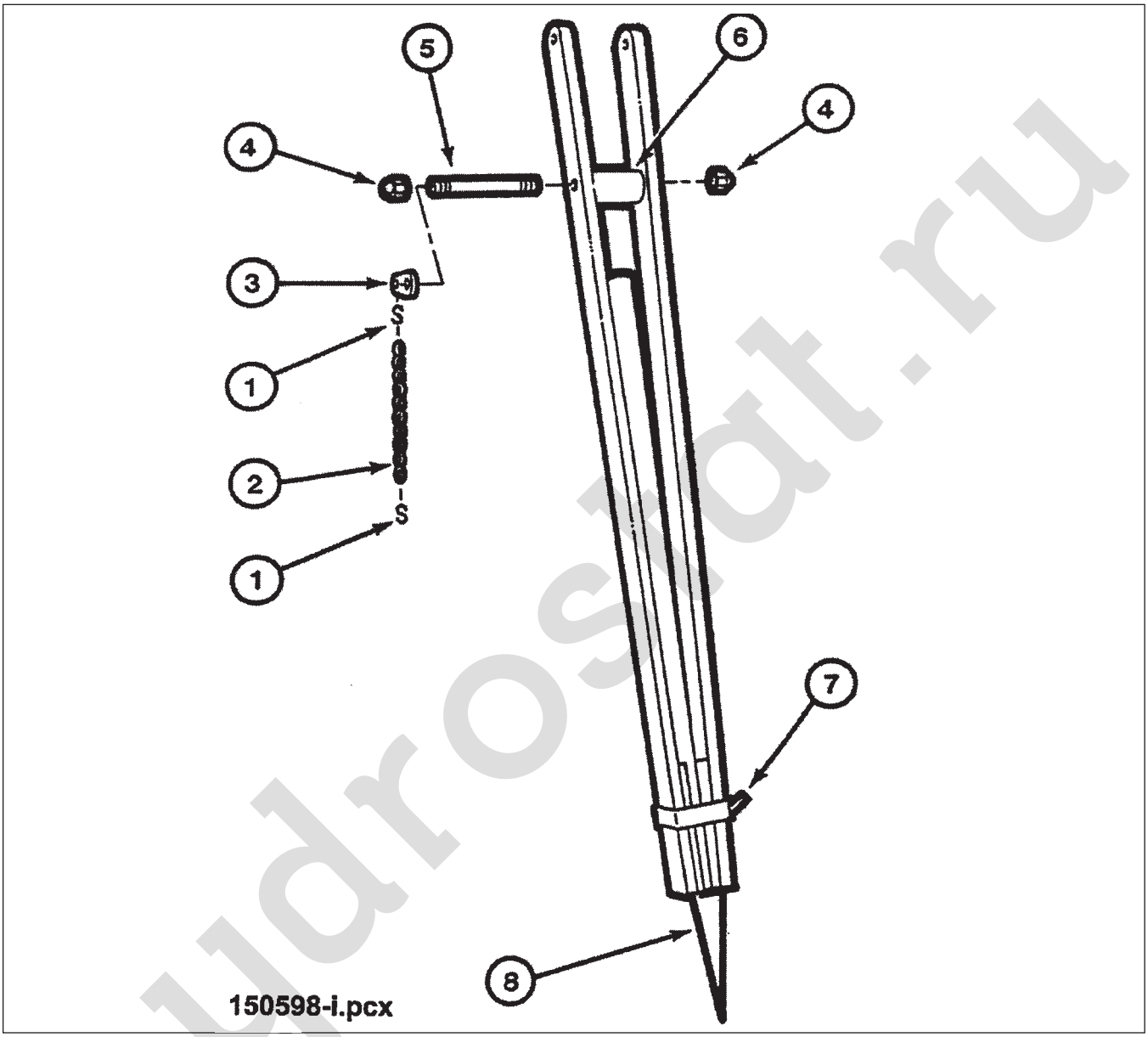

FIGURE & INDEX NO.	DESCRIPTION	UNITS PER ASSEMBLY
1.	S-Hook	2
2.	Chain #4 Bulk (Feet)	1
3.	Mount, Chain	2
4.	Nut, Mach. Acorn Brass ¼-20	2
5.	Stud, Leg Spacer	1
6.	Spacer, Leg	1
7.	Screw, Tripod Tee	1
8.	Leg, Extension	1

LASER LEVELLING EQUIPMENT
OMNI-DIRECTIONAL RECEIVER

Applications

The Omni-Directional Receiver is the main component of the Laserplane Control System. This system is used to provide automatic control in landlevelling, drainage and construction applications.

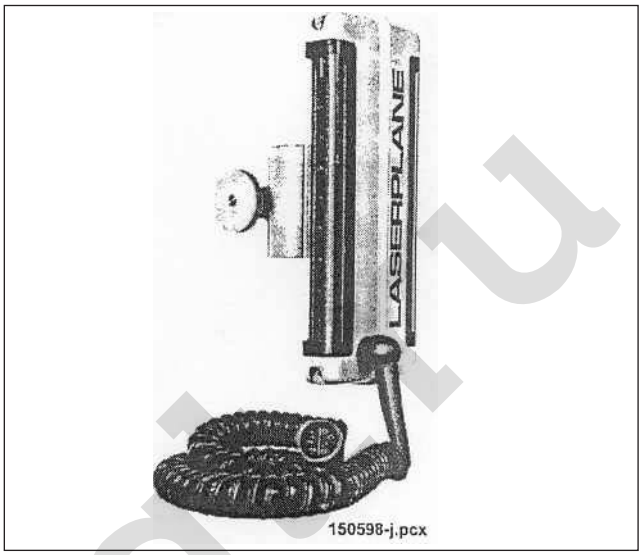

Description

The Omni-Directional Receiver accepts the laser signal and transmits it to the control box for processing. It has four sets of photocell strips positioned to accept the laser light from any direction.

Features

1.	Advanced Electronics	The receiver uses state of the art electronics to reduce its circuitry and maintain extreme sensitivity and performance. Its current draw has been reduced to less than 0,5 amps.
2.	5 or 7 Channel	The same receiver can be used with either 5 or 7 channel receiving systems.
3.	Mounting	The clamp type mount allows it to be used on an Electric Mast, a Manual Mast, or a Rigid Mast.
4.	Housing	The cast aluminium body with impact resistant lens provides a rugged, lightweight and waterproof enclosure.

Specifications

Input	12/24 VDC
Output	12/24 VDC
Grounding	Positive/Negative Ground

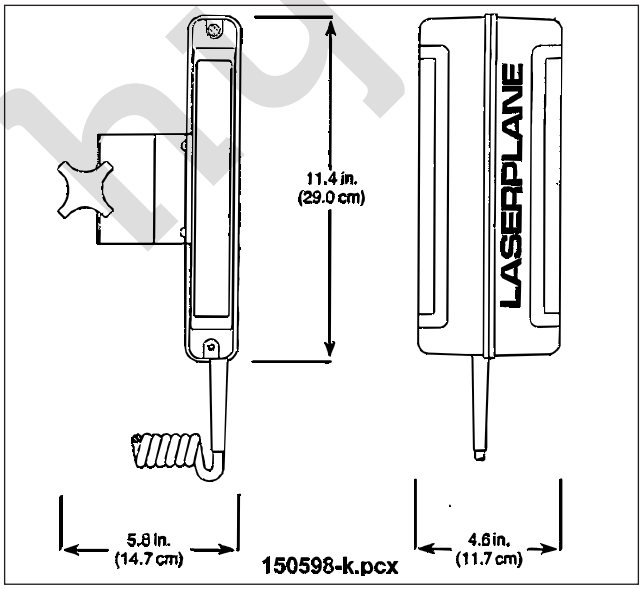

EARTH DRILL

A Hanger Bracket
B Tail Hoses
C Gearbox
D Auger
E Pilot Bit
F Swivel Pins
G Hydraulic Motor
H Earth Drill Motor Unit
J Auger Mounting Flanges
K Auger Teeth

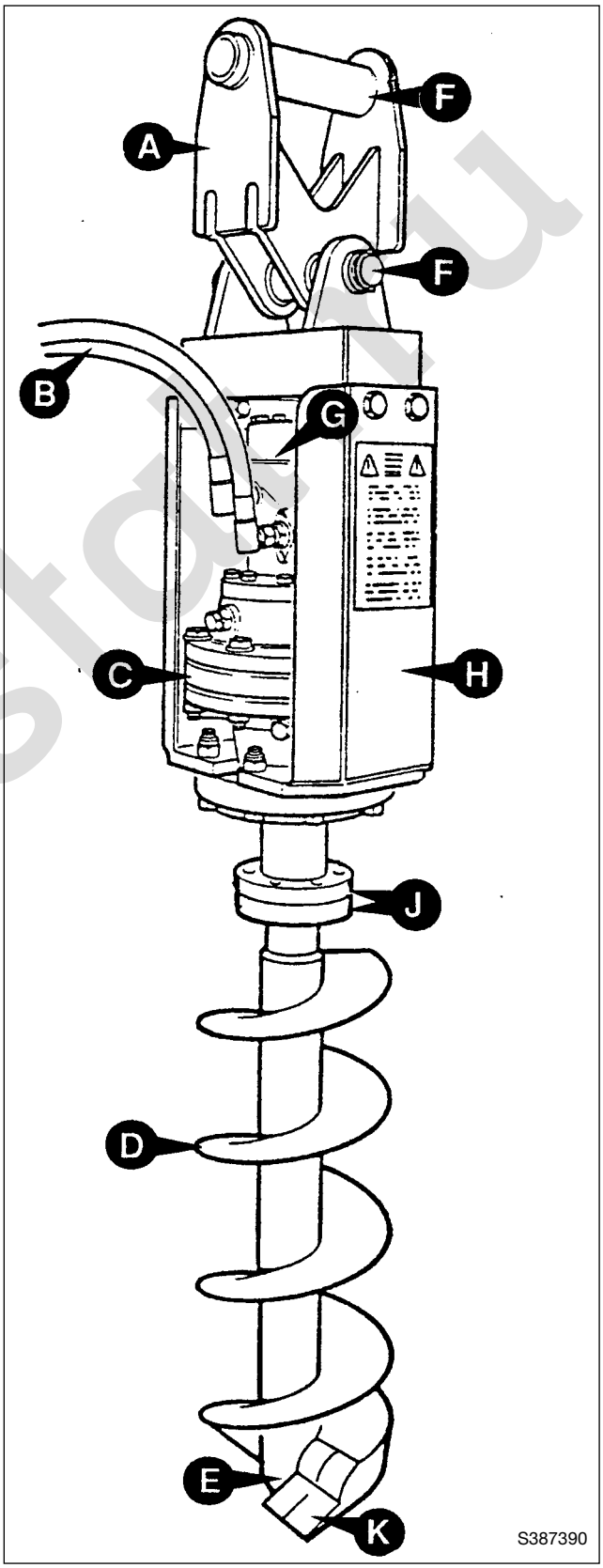

EARTH DRILL (continued)

The earth drill utilises the bucket crowd/dump ram hydraulic circuit for operation.

Installing

1 Remove bucket/attachment and quickhitch, remove tipping link **A** the fully retract the ram.

2 Using suitable lifting gear, set the earth drill on level ground with its hoses on the right side when viewed from the hanger bracket end.

3 Drive the machine up to the hanger bracket end of the earth drill. Manoeuvre the boom and dipper to align the dipper pivot hole with the hanger bracket hole. Use the attachment pivot pin **F** and locking pin to secure the hanger bracket.

4 Switch off the engine. When the engine has stopped, turn the starter key back to IGN and vent system pressure in the bucket crowd ram circuit by operating the bucket control at least six times. Turn the starter key to OFF and remove it.

5 Connect the earth drill hydraulic hoses.

- **a** Unscrew the hoses **B** from the crowd ram steel pipes. Cap **C** the ends of the steel pipes to prevent ingress of dirt.
- **b** Fit a male/male adaptor **D** to the free end of each crowd ram hose. Tighten firmly.
- **c** Route the drill hoses as shown on the illustration to prevent the hoses from being damaged. Screw the earth drill hoses **E** to the free ends of the adaptors fitted in **D**. Tighten firmly.

Removing

1 Manoeuvre the machine so that the earth drill is lying flat on the ground with its hanger bracket nearest the machine.

2 Switch off the engine. When the engine has stopped, turn the starter key back to IGN and vent system pressure in the bucket crown ram circuit by operating the bucket control at least six times. Turn the starter key to OFF and remove it.

3 Remove blanking caps **C**, disconnect hoses **B** from **E**. Reconnect hoses **B** to crowd ram, fit adaptor and caps to drill to prevent dirt ingress and prevent their loss.

4 Remove pivot pin securing earth drill hanger bracket.

5 Refit tipping link **A** and lock pivot pin.

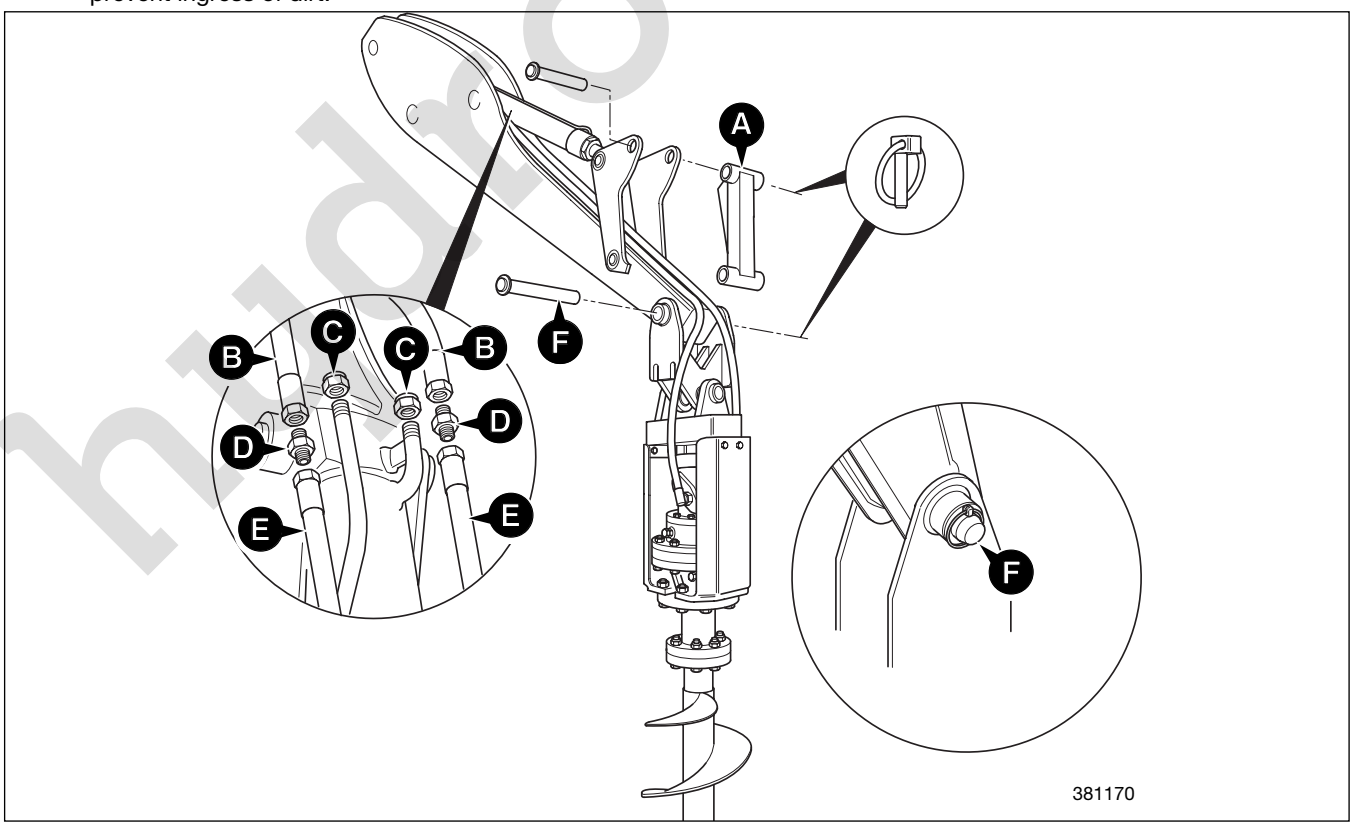

EARTH DRILL
(continued)

Fitting Auger

It is important that the correct type of auger is used, refer to, Operating Hints. The auger mounting flange has three fixing bolt positions on light duty augers and six fixing bolt positions on heavy duty augers, as shown at **A**.

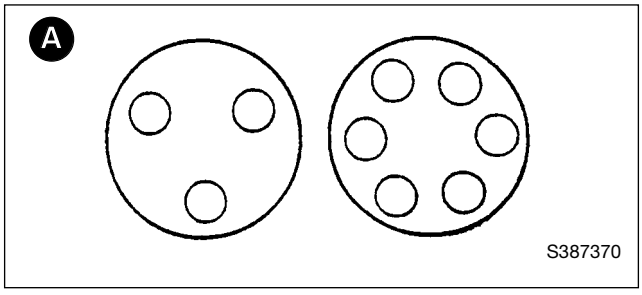

1 Manoeuvre the machine so that the earth drill is lying flat on firm level ground with its hanger bracket nearest the machine.

Note: It the auger to be fitted is of a diameter **B**, larger than the depth **C** of the earth drill, it will make fitting easier if the earth drill is placed on a block of wood **D**, thick enough to prevent the auger touching the ground. Make sure the earth drill cannot fall off the block of wood.

2 Switch off the engine and remove the starter key.

3 Position the auger.

⚠ CAUTION

Augers are heavy. Make sure the auger Is safely supported when being lifted. Refer to the manufacturers information for the auger weight.
B-2-2-5

Using suitable lifting tackle, attach a sling to the auger and position it so that it's mounting flange **E** aligns with the flange **F** on the earth drill.

4 Secure the auger to the earth drill. Tighten the bolts to a torque of 244 Nm (180 lbf ft).

5 Remove the lifting tackle from the auger.

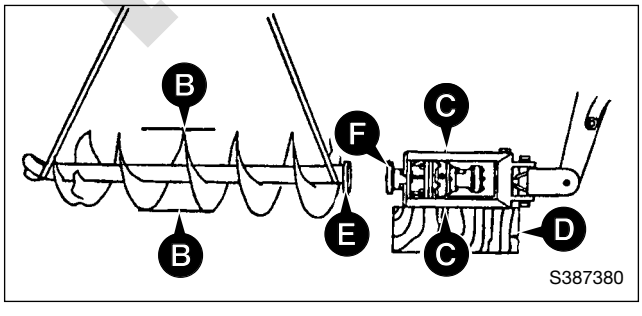

Removing Auger

Removing the auger is the reverse of fitting instructions.

EARTH DRILL
(continued)

Operating Hints

1 Do not install an auger larger than the maximum specified for the earth drill/machine combination you are using (see SPECIFICATION section).

2 Choose the correct type of auger:

- **a** For working in light soil use a light duty auger with standard teeth and a standard pilot bit.
- **b** In firm to heavy going (e.g. a mixture of soil and clay) use a heavy duty auger with standard teeth and a standard pilot bit.
- **c** In very heavy going (e.g. a mixture including rock and/or concrete) use a heavy duty auger with tungsten pilot bit, a pick assembly (general purpose or heavy duty depending on the ground composition) and carbide tipped teeth.

3 Where replaceable parts are in sets, make sure all are identical and of the same manufacture. A mixture of such parts could result in uneven cutting and cause damage to the earth drill and/or auger.

When interchanging sets of wear parts, e.g. when transferring from one set of ground conditions to another, refer to Replacing Auger, Wear Parts in the MAINTENANCE section of this publication for correct procedures.

4 Do not allow replaceable parts to wear excessively. This will avoid costly wear to the parts supporting or housing them.

Drilling

⚠ WARNING

Work sites can he hazardous. Inspect the site before working on it. Check for potholes, weak ground, hidden rocks, etc. Check for utilities (electric cables, gas and water pipes, etc.). Mark the positions of underground cables and pipes if you will be breaking ground.
A-1-4.411

With the earth drill and selected auger installed on the machine as described earlier, proceed as follows:

1 Position the machine and use the boom/dipper controls to lower the earth drill so that the auger point grounds where the hole is to be drilled. At this stage the dipper should be pointing downwards at an angle of approximately 30° to the ground. Do not apply downward pressure.

2 Use the machine controls to revolve the auger in a clockwise direction. Adjust the engine speed to give an auger speed of approximately 60 rpm.

3 Start drilling

- **a** Under all but extremely hard ground conditions, the auger should penetrate the ground under it's own weight. If pressure is necessary it should not be excessive. The auger should always be kept vertical.
- **b** Operate the machine controls to allow the loader arm/dipper to follow, or if necessary push, the earth drill as it penetrates the ground.

Note: if the auger encounters an obstacle and gets jammed, the machine override protection (pressure relief valve) will operate to prevent damage to the earth drill and machine hydraulic circuits. To release a jammed auger, use the machine controls to rotate it anti-clockwise. When the auger is free, restart the auger in a clockwise direction and resume drilling.

When the required depth is reached, halt the progress of the auger by stopping the downward movement of the loader arm/dipper.

- **c** Allow the auger to continue rotating and lift it from the hole by slowly raising the loader arm/dipper.

4 Clean the auger, when the auger is clear of the ground, use the machine controls to remove it from the vicinity of the hole and stop it rotating. Select reverse rotation to shake off the earth collected.

Transporting

1 Raise the boom/dipper so that the auger tip clears the ground. Tuck in the earth drill as close to the machine as possible without it being a potential cause of damage (see 3 below).

2 Always stop the auger rotating when moving around the site, even if it is only from one hole position to the next in a fence post planting operation.

3 Remember that the earth drill/auger assembly is free to swing around as the ground surface undulates. To minimise the amount by which the assembly swings, drive very slowly and carefully.

4 The earth drill must always be removed from the machine before travelling on public highways.

EARTH DRILL
(continued)

Maintenance

Check all replaceable parts daily for wear or damage. Never operate the earth drill with badly worn or damaged auger parts.

Renewal of worn or damaged auger parts is best carried out with the earth drill attached to the machine.

Replacing Auger Wear Parts

1 Position a block of wood thick enough to keep the auger clear of the ground. Manoeuvre the carrier controls so that the earth drill/auger ends up horizontal, with the earth drill supported on the wood.

2 Switch **off** the carrier engine. When **the** engine has stopped turning, return **the** starter **key** to'IGN'position. Operate **the** earth drill controls at least six times to vent system pressure. Switch the starter key 'OFF' and remove it.

There are two combinations of wear parts.

- **a** Standard teeth with a standard pilot bit.
- **b** Carbide tipped teeth with a tungsten pilot bit assembly incorporating a carbide tipped pilot bit and picks.

The individual components **of** each combination should not be mixed, e.g. do not use standard teeth with a tungsten pilot bit assembly.

Standard and Carbide Tipped Teeth

Removal

1 Clean the area around each tooth **A**.

2 Using a soft faced hammer and a suitable drift, knock the tooth off adaptor **B**.

3 Clean the adaptor and remove locking rubber **C**.

Replacement

Replacement is the reverse of removal.

Note: *A new locking rubber is supplied with each new tooth.*
Always fit a new rubber with a new tooth.

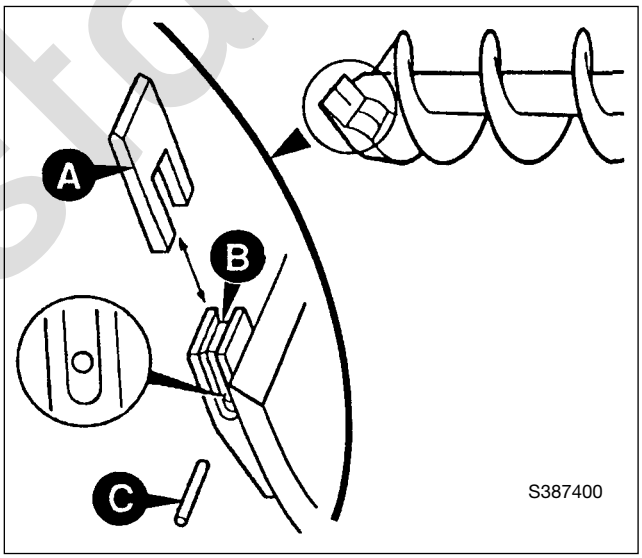

EARTH DRILL
(continued)

Standard Pilot Bit

Removal

1 Clean the area around bit mounting bolt nut **D** and the end of the auger.
2 Withdraw the nut and bolt and gently tap the bit to remove it from the auger.

Replacement

Replacement is the reverse of removal. Tighten the nut and bolt firmly.

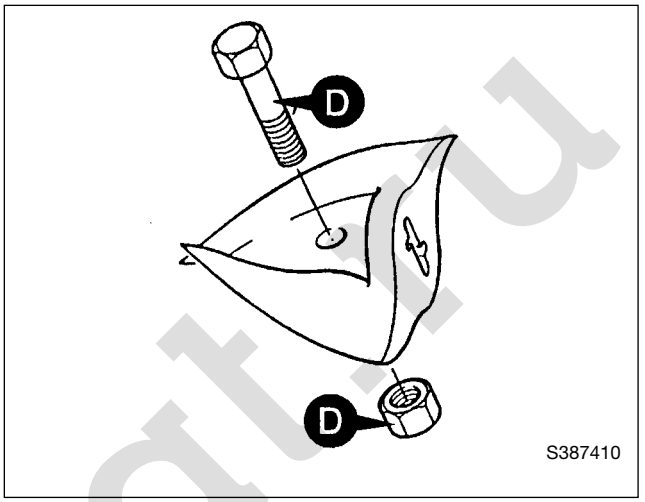

Tungsten Pilot Bit Assembly E

The removal and replacement procedures are the same as those for the standard pilot bit.

Carbide Tipped Pilot Bit

Removal

Unscrew the carbide tipped pilot bit **F** from the tungsten pilot bit assembly **E**. Make sure the threaded hole in the assembly is free of dirt.

Replacement

Replacement is the reverse of removal.

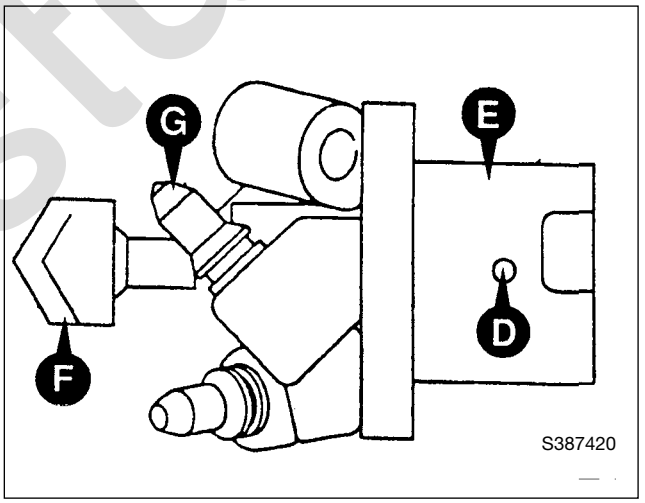

Picks

Inspect each pick **G** for signs of wear, chipping or other damage. Also check that each pick is free to rotate. If any one pick is damaged or does not rotate, replace the complete set.

Different types and makes of pick must not be mixed. Different types, although nominally the same, will be sufficiently different in size to cause uneven and excessive loading of the earth drill motor and the auger flights.

Removal

Lever out the picks using removal tool **H** which is available from your JCB distributor.

Replacement

Using a soft faced hammer, carefully drive each pick fully home into its holder. Ensure that the pick is free to rotate.

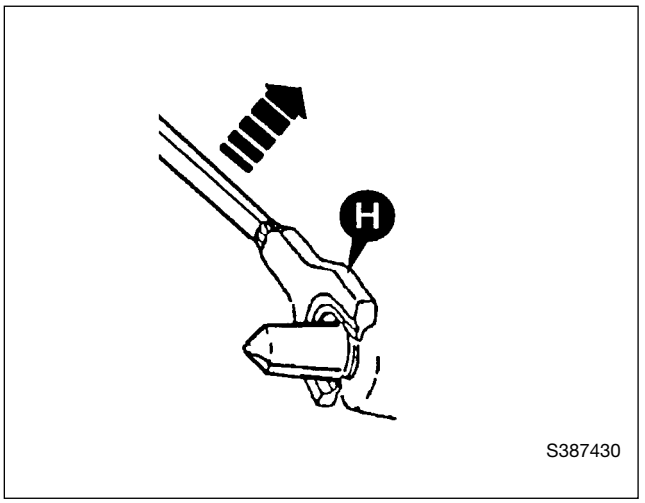

EARTH DRILL
(continued)

Checking the Oil Level (Weekly)

Removal

1 Manipulate the machine controls so that the earth drill is suspended vertically. Install the machine safety strut.

2 Switch on the engine and make the machine safe by operating the attachment controls at least six times to vent system pressure.

3 Remove level/filler plug **A**. The oil level should be to the rim of the plug aperture. Top up if necessary (see Specification for oil type) and replace the plug.

Changing

The earth drill gearbox incorporates several drain plugs. Two plugs **B** are shown and further plugs are situated on the opposite side of the assembly.

1 To drain the gearbox oil it is preferable to position the earth drill horizontally with filler plug **A** uppermost, refer to **Replacing Auger Wear Parts**.

2 Switch on the engine and make the machine safe by operating the attachment controls at least six times to vent system pressure.

3 Drain the oil level

Locate a convenient drain plug an the under side of the unit and place a receptacle beneath it of at least 2 litres ($3^1/_2$ pint) capacity.

Remove filler plug **A** and then the selected drain plug **B**. When the oil has drained completely, clean the two plug apertures and replace the drain plug.

4 Replace the oil, refer to **Specification** for oil type and capacity. Fill with oil and replace the filler plug.

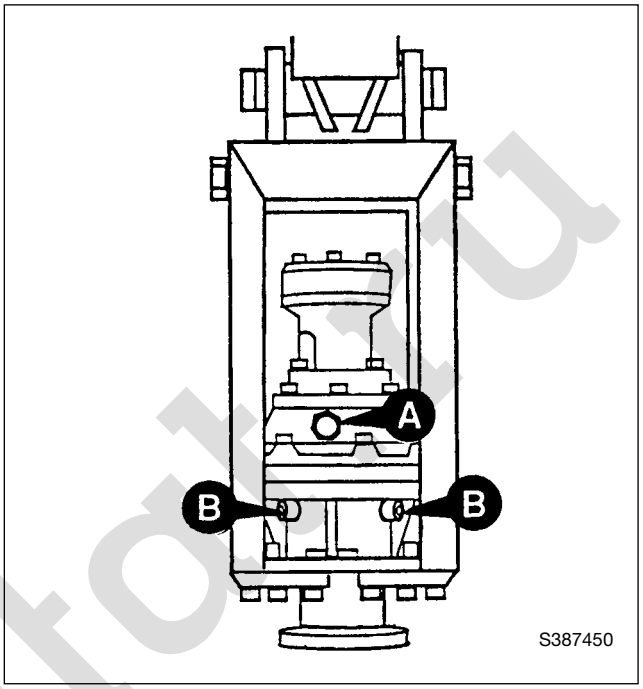

Daily Service Schedules

Clean
1 The earth drill and hoses

Check
2 For damage to earth drill and hoses
3 The auger replaceable parts for damage or wear.
4 The auger flange nuts/bolts for tightness.

Grease
5 The hanger swivel pins.

Weekly Service Schedules

Do Daily jobs plus:

Check
1 Security of mounting bolts, pivot pins, retaining pins, etc.
2 Tail hoses for security and leaks.
3 The earth drill gearbox oil level.

Every 100 Hours

Do Daily and Weekly jobs plus:

Change
1 The earth drill gearbox oil.

EARTH DRILL
(continued)

Technical Specification

Oil flow @ 60rpm -	45 litres (9.9 UK gal)
Oil flow (max) -	70 litres (15.4 UK gal)
Oil pressure (max) -	200 bar (2900 lbf/in^2)
Gearbox oil	
Capacity -	1.8 litres (0.4 UK gal)
Type -	JCB Super Universal Agricultural SAE 10W/40
Military Equivalent -	OMD-90
Earth drill weight (including hanger bracket, excluding auger) -	100 kg (220 lb)
Auger torque @ 175 bar oil pressure -	2000 Nm
Auger diameter (max) -	914 mm (heavy duty only)

Augers Available

Heavy Duty (diameter)	Light Duty (diameter)
230 mm	101 mm
305 mm	152 mm
381 mm	229 mm
457 mm	254 mm
610 mm	305 mm
762 mm	380 mm

Auger Extensions

Length
500 mm
1000 mm
1500 mm

360 HAMMERMASTER

Carrier Machine Suitability

The Hammermaster is suitable for use with the JCB 3CX/4CX Backhoe Loaders when fitted with a high flow auxiliary/Breaker hydraulic circuit.

Constant Blow Energy

Basically the Hammermaster functions by repeatedly raising a steel piston and driving it down onto the head of a removable breaking or cutting tool.

The upstroke and the downstroke of the breaker operate at different pressures. The upstroke is created by supply pressure and the downstroke by a lower pressure, which is created within the breaker. This system means that the breaker blow energy is always constant provided that the supply pressure is kept within the required limits. The operation of the hammer is explained in more detail in **Principle of Operation**.

Hammermaster 360 range.

The JCB 360 Hammermaster fits onto the Backhoe Quickhitch.

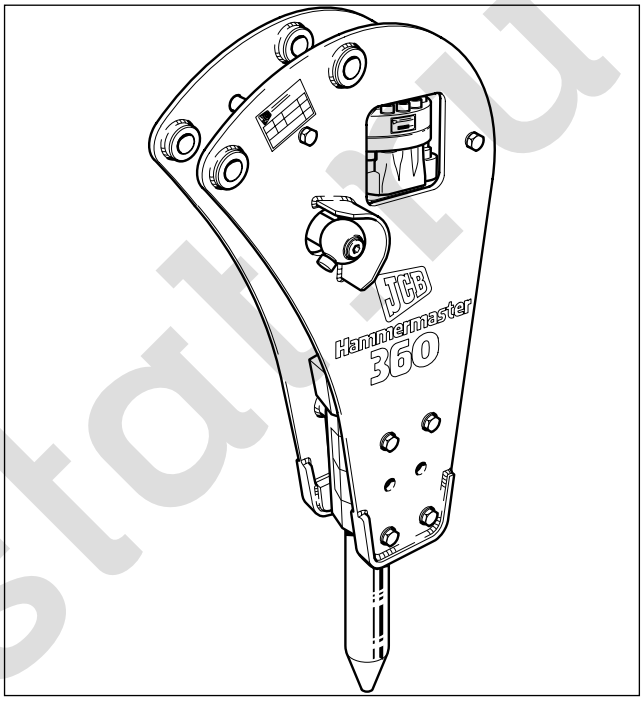

360 HAMMERMASTER (continued)

Check List - Equipment

The Hammermaster 360:

1 Breaker - assembled with mounting side plates.

2 Tail Hoses - assembled with quick release couplings.

3 Moil Tool

4 Chisel Tool

5 Grease Gun

6 JCB Special Hammer Grease Cartridge.

7 Noise Warning Decal (self adhesive) .

8 Owners Manual.

Attachment Identification

Serial Number - Always quote the serial number given on the breaker's rating plate when obtaining replacement parts.

Component Identification

Key

A	Mounting Side Plates	**F**	Front Head
B1	LP Accumulator	**G**	Tool
B2	HP Accumulator	**H**	Side Plate Fixing Bolts
C	Valve Housing	**J**	Swivel Coupling
D	Barrel	**K**	Breaker
E	Tie Rod		

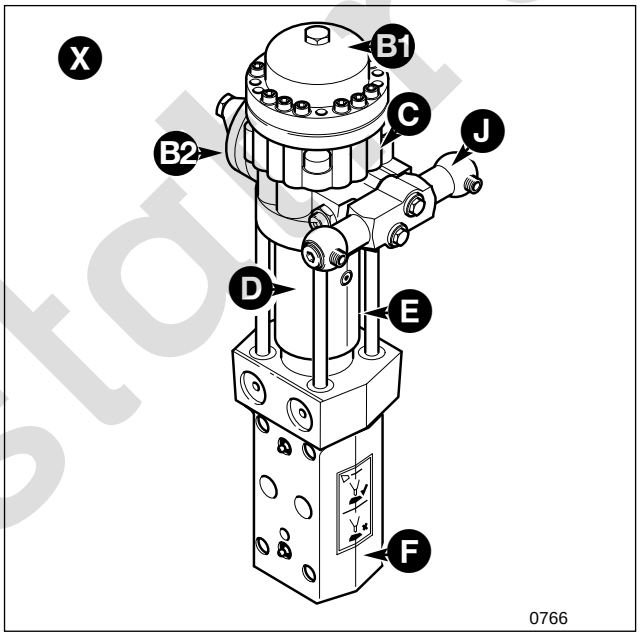

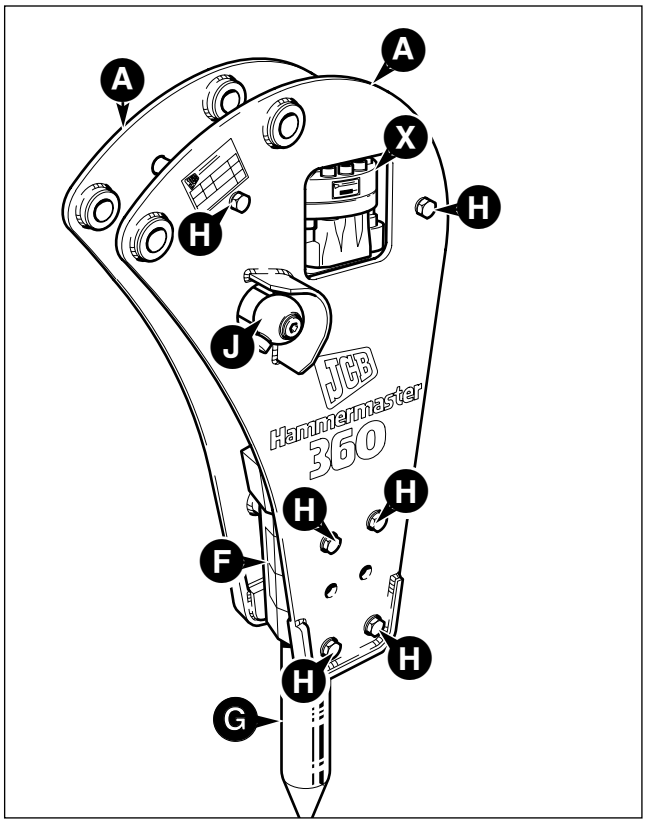

360 HAMMERMASTER (continued)

⚠ WARNING

The accumulator(s) in the hammermaster are pressurised even when there is no hydraulic pressure to the breaker. Never tamper with an accumulator. Attempting to dismantle an accumulator without first releasing the pressure can cause injury or death. Such work should only be carried out by qualified servicing personnel who have studied the relevant Service Manual.
B-1-3-7

⚠ WARNING

Protect your ears. Working with the Hammermaster without wearing earmuffs can damage your hearing. Wear earmuffs when working with the hammer.
B-2-1-11

⚠ CAUTION

Every breaker has its own flow requirement. If the machine is not preset to deliver the correct flow for the breaker fitted, either the breaker will not function correctly or the machine may be damaged.

Whenever a breaker or hammer is fitted, it is ESSENTIAL that the engine speed is correctly preset to suit the breaker.

Have your JCB dealer reset the engine speed before using the machine with a new breaker fitted. This is a specialist job and the machine can be seriously damaged if it is not done correctly.
8-2-8-12

⚠ CAUTION

Metal Splinters

You can be injured by flying metal splinters when driving metal pins in and out. Use a soft faced hammer or drift to remove and fit metal pins. Always wear safety glasses.
INT-3-1-3

⚠ CAUTION

If you have an attachment which is not covered in this handbook do not install it, use it or remove it until you have obtained, read and understood the pertinent information. Install attachments only on the machines for which they were designed.
5-5-1-1

⚠ CAUTION

Take care when lifting/handling. Refer to SPECIFICATION for the attachment weight.
B-2-1-2/2

⚠ CAUTION

Equipment Limits

Operating the equipment beyond its design limits can cause damage. It can also be dangerous.

Do not operate the equipment outside its limits.

Do not try to upgrade the equipment's performance by unapproved modifications.
A-1-4-2

Decals

The following decals are fitted to the Hammermaster:

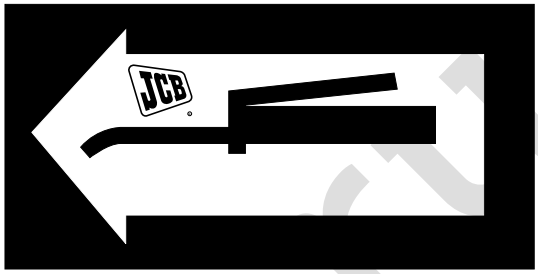

0549

0646

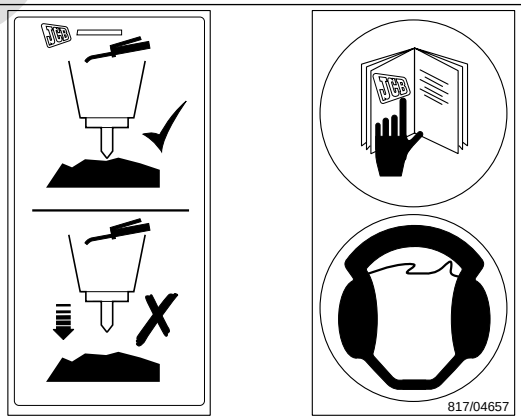

0768

Noise Warning Decal

Mount the self adhesive noise warning decal inside the cab of the carrier machine where it will be easily visible to the operator when using the Hammermaster.

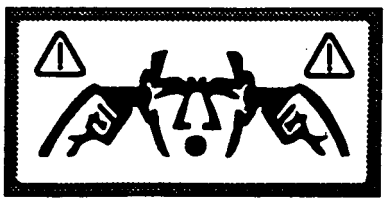

817/00592

S0281

360 HAMMERMASTER (continued)

Safety First

⚠ WARNING

Read this book carefully before operating the Hammermaster for the first time. Protect yourself and others against flying debris. Wear protective eye glasses and ear plugs when operating the Hammermaster. Stop the carrier engine before changing the tool or servicing the Hammermaster.
B-2-1-4/1

Note: Practice using the Hammermaster off the job before working with it for the first time.

Principles of Breaking

The basic way of breaking with a hydraulic breaker is penetrative (or cutting).

Penetrative Breaking

In this form of breaking a conical or chisel-type tool is forced inside the material. This method is most effective in soft, layered or plastic, low abrasive material.

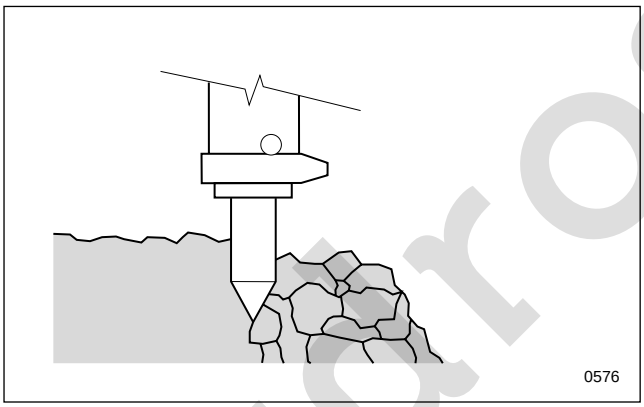

Note: The illustrations on this and the following page are typical only, it is not meant to represent any particular breaker.

Breaking - Do's and Don'ts

DO

✔ **Do position the tool against the work surface at an angle of 90°**

This is the most effective angle of attack and also reduces wear in the chuck and the chances of tool breakage.

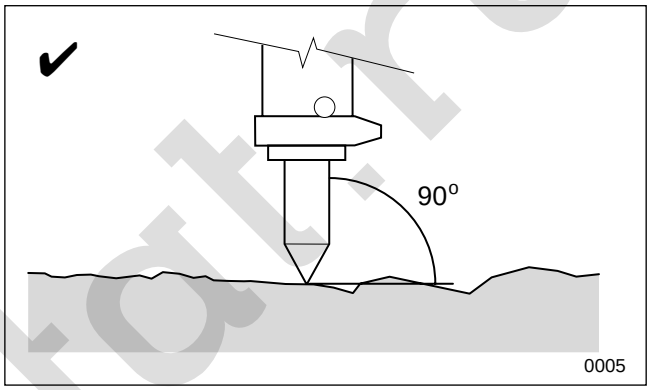

✔ **Do use the carrier boom to press the breaker firmly against the material**

To stop excessive vibration.

✔ **Do reposition the tool often**

This prevents heat build up at the tool point and between the piston and the tool.

✔ **Do use the benching method to break hard or frozen ground**

Start at the middle and remove the material, then continue outwards, breaking the material in towards the centre.

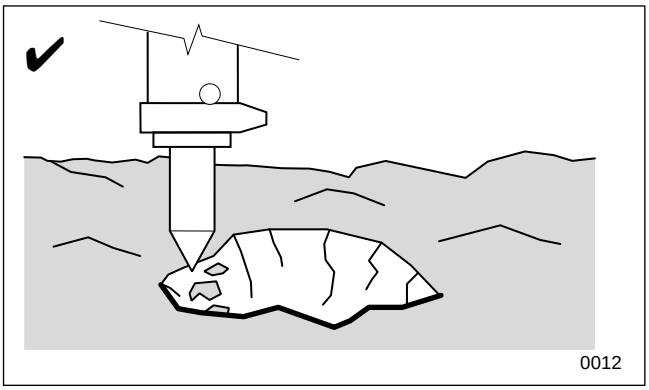

✔ **Do stop if there is sudden resistance under the ground**

There could be an underground utility, such as a pipe or an armoured electrical cable indicated by a change in engine or breaker noise.

360 HAMMERMASTER (continued)

Breaking - Do's and Don'ts (cont'd)

DO (cont'd)

✔ **Do prevent 'blank firing'.**

This occurs if the breaker is operated with the tool not pressed against solid material. The internal shock that this produces can damage the breaker. Stop the breaker just before the material breaks apart.

Avoid blank firing when the material breaks up. Shut off the hammer just before the tool breaks through the material. Blank Firing causes rapid wear to the tool retainer and shank of the tool.

DON'T

✘ **Don't strike one spot more than 15 secs. at a time unless there are signs of penetration**

If the material hasn't yielded by this time it probably isn't going to. All that will happen is that the tool will overheat, shortening its life.

✘ **Don't strike and bend with the tool at the same time**

There are two reasons for this: you will be wasting blow energy, because the tool is not at 90° to the material, and you could damage the tool, its strength is along its length, not across its width.

✘ **Don't use the breaker as a lever**

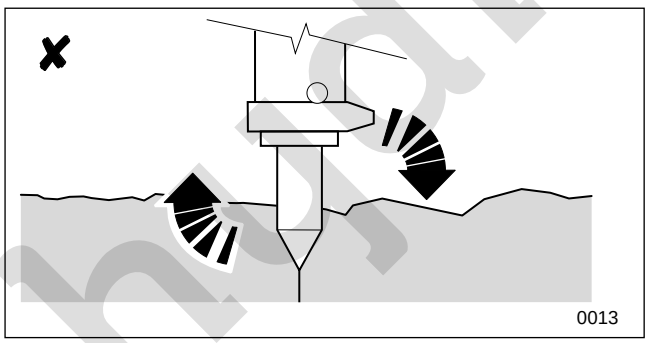

✘ **Don't use the tool as a lifting hook**

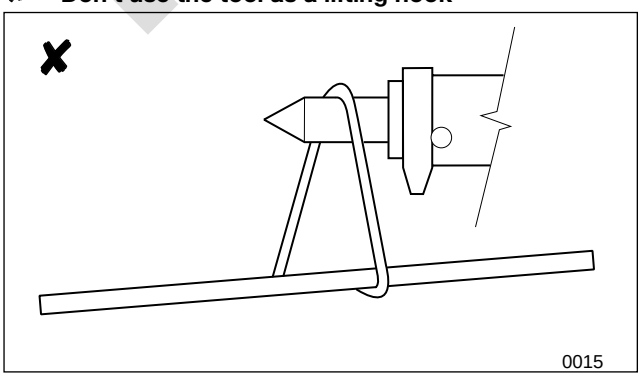

✘ **Don't let the breaker run idle. Always press the breaker against the material**

Or you will get 'blank firing'.

✘ **Don't let the boom or dipper rams reach the end of their travel when the breaker is operated**

This could damage the machine's hydraulic rams.

✘ **Don't begin normal operation in low temperatures until the breaker is warmed up**

The tool could fail due to brittle fracture if it is operated at low temperatures. The warm up process involves running the engine for 5 - 10 minutes, followed by breaking operations at 2/3 recommended engine speed for a further 5 - 10 minutes.

✘ **Don't immerse the breaker in mud or water beyond the depth of the tool**

Ingress of mud or water above the top of the tool can cause a pressure build-up between the piston and tool, resulting in serious damage to the breaker. Special conversion kits are available to allow underwater breaking. An air compressor will also be required.

Noise Dampening

Operating the breaker near residential areas or other noise exposure areas can cause noise pollution.

In order to avoid unnecessary noise, please follow these basic rules:

1. When operating with the breaker, keep the tool at 90° to the material. Working at other angles increases the noise level by 5 - 8 dB.

2. Replace or fix all parts that are worn out, damaged or loosened. This not only saves your breaker but it decreases the noise level.

360 HAMMERMASTER (continued)

The Effects of Blank Firing

If the breaker is operated without the tool being pressed against solid material (known as ‘blank firing’) both the breaker and the tool can be damaged. Damage can be caused to the breaker by the internal shocks which develop in the hydraulic components. Blank firing also causes rapid wear to the tool retainer pins and the tool itself. Typically, damage is in the form of heavily burred edges on the tool and retainer pins as shown. Such damage is usually not repairable and therefore adds extra (and unnecessary) costs and delays to the job.

To prevent blank firing:

a NEVER operate the breaker without a tool.

b NEVER operate a breaker unless the tool is pressed against a solid surface.

c Stop the breaker just before the tool breaks through the material.

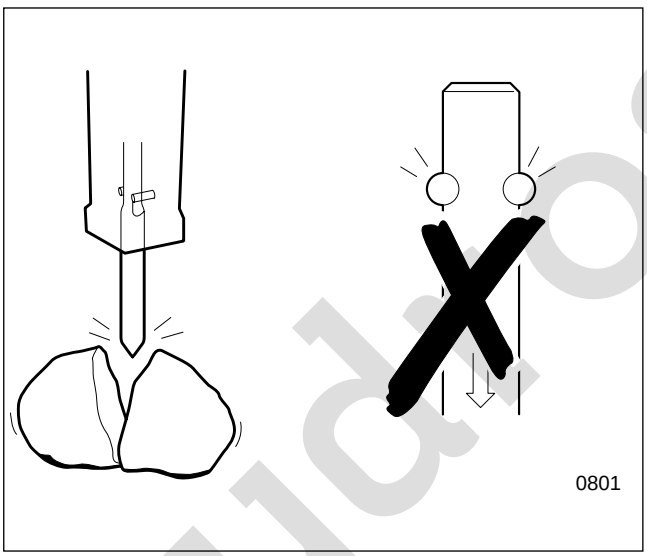

Do Not Blank Fire

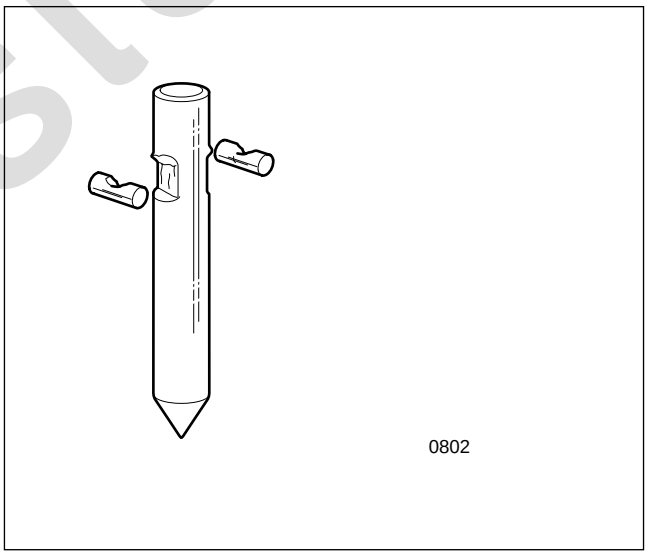

The effects of blank firing on tool and retaining pins.

360 HAMMERMASTER (continued)

Travelling

On Site

For Sideshift Machines
Position the Hammermaster as shown at **A**.

On a Truck

Position the Hammermaster as shown at **C**. Ensure that the attachment cannot be operated while being transported.

Note: When driving the machine up and down the loading ramps, keep the Hammermaster at the end furthest from the truck cab and as near the ground as possible.

The safe transit of the load is the responsibility of the transport contractor and driver. Any machine, attachments or parts that may move during transit must be adequately secured.
5-2-5-9

Note: Before transporting the machine make sure you will be obeying the rules and laws of all the areas that the machine will be carried through.

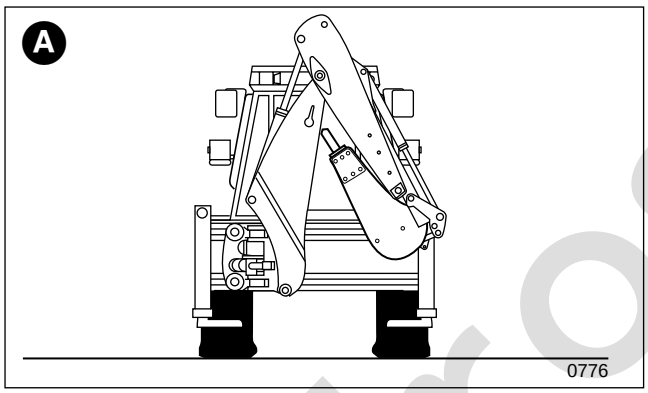

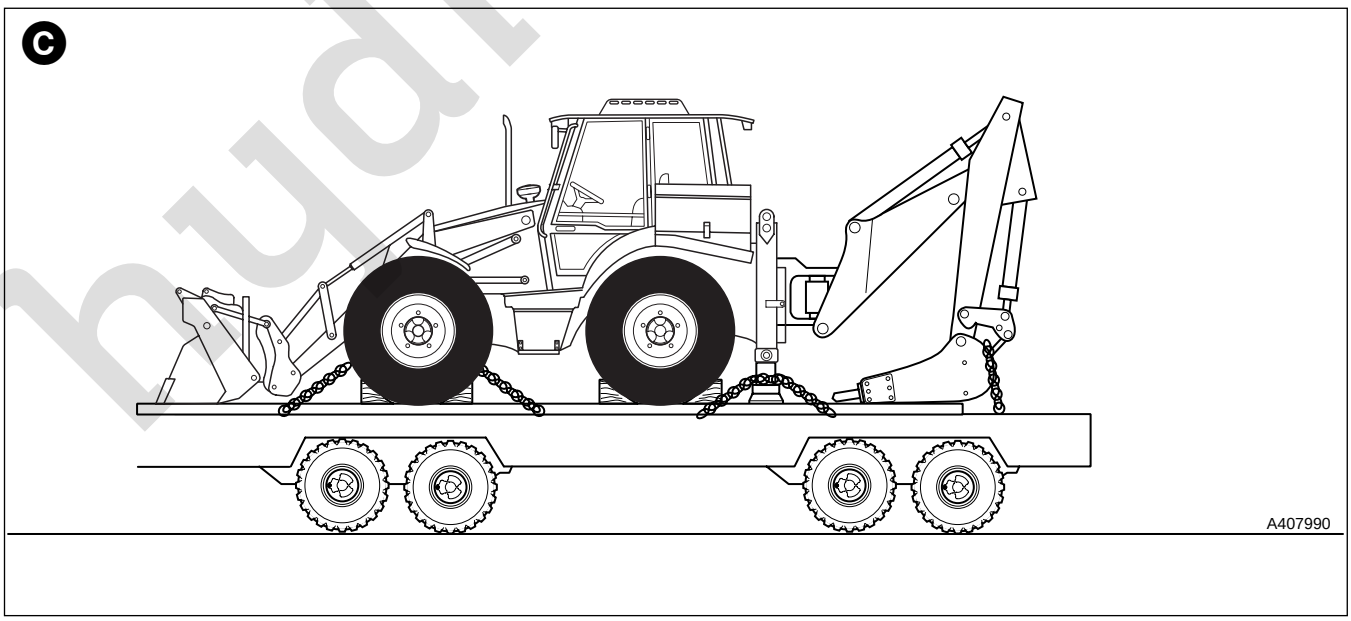

360 HAMMERMASTER (continued)

Hydraulic Oils, Filtering and Cooling

Introduction

Generally speaking the hydraulic oil specified for the machine can be used in the Hammermaster. However, since working with the Hammermaster will heat the oil much more than excavation work, the viscosity of the oil must be checked periodically when working in hot climates or environment.

When the Hammermaster is used continuously, the temperature of the hydraulic oil normalises at a certain level depending on conditions and on the carrier. At this temperature, the viscosity of the hydraulic oil should be 20 - 40 cSt (2.90 - 5.35 °E).

The Hammermaster must not be started if the viscosity of the hydraulic oil is above 1000 cSt (131 °E) or operated when the viscosity of the hydraulic oil is below 15 cSt (2.35 °E).

Possible Results of Using Incorrect Oil

Oil too thick:
- Difficult start up.
- Stiff operation.
- Hammermaster strikes irregularly and slowly.
- Danger of cavitation in the pumps and Hammermaster.
- Sticky valves.
- Filter bypass, impurities in oil not removed.

Oil too thin:
- Efficiency losses (internal leaks).
- Damage to gaskets and seals, leaks.
- Accelerated wearing of parts, because of decreased lubrication efficiency.

Note: We recommend different hydraulic oils for use in summer and winter if there is an average temperature difference of more than 35 °C (95 °F).

Special Oils

In some cases special oils (e.g. biological oils and non-inflammable oils) can be used with Hammermasters. Observe the following aspects when considering the use of special oils:

- The viscosity range in the special oil must be in the given range (15 - 1000 cSt).
- The lubrication properties must be good enough.
- The corrosion resistance properties must be good enough.

Note: Although a special oil could be suitable for the carrier, it may not be suitable for the Hammermaster, due to the high piston speed. Please check with your JCB Distributor.

JCB MACHINE OWNERS SHOULD ALWAYS CONSULT THEIR JCB DISTRIBUTOR BEFORE CHANGING THE MACHINE HYDRAULIC OIL SPECIFICATION.

Hydraulic Oil Purity

No separate filter is required for the Hammermaster. The carrier's oil filter will clean the oil flowing through the Hammermaster. The purpose of the oil filter is to remove impurities from the hydraulic oil since they cause accelerated component wear, blockages and even seizure. Impurities also cause the oil to heat and deteriorate. Air and water are also impurities in oil. Not all impurities can be seen with the naked eye.

Impurities enter the hydraulic system:

- During hydraulic oil changes and refilling.
- When components are repaired or serviced.
- When the Hammermaster is being installed on the carrier.
- Because of component wear.

Oil Filter

In hydraulic hammer work, the carrier oil filter must fulfil the following specifications:

- The oil filter must allow maximum particle size of 25 microns (0.025 mm).
- The oil filter material must be man-made fibre cloth or very fine gauge metallic mesh to withstand pressure fluctuations.
- The oil filter must have a volume flow capacity of at least twice the Hammermasters maximum flow.

In general, oil companies guarantee new oils to have a particle count of 40 microns maximum. When adding oil to the system the oil must be filtered.

360 HAMMERMASTER (continued)

Principle of Operation I - Start Up

When the Hammer cycle begins, the high **A** and low **B** pressure circuits are common to each other and separate from the tank (or return) line **T.**

The entire hammer is under low pressure which keeps the piston **1** and distributor **2** in their lowest positions. Hydraulic oil flows into the low pressure accumulator **6** and acts on **C**, the end of the spool **3** of the pressure adjusting valve. Increasing pressure compresses the spring **4** of the valve and spool **3** moves to a pre-adjusted position closing the path between the high pressure circuit and the low pressure circuit (which is now pre-charged). Pressure continues to increase in the high pressure circuit and the normal hammer cycle begins.

Principle of Operation II - Raising the Piston

The high pressure oil acts on area **D** of the distributor **2** moving it to its uppermost position. This allows area **E** of piston **1** access to tank line **T**. High pressure oil acting on the piston **1**. As the piston **1** rises, area **G** forces oil into the low pressure accumulator **6** storing energy.

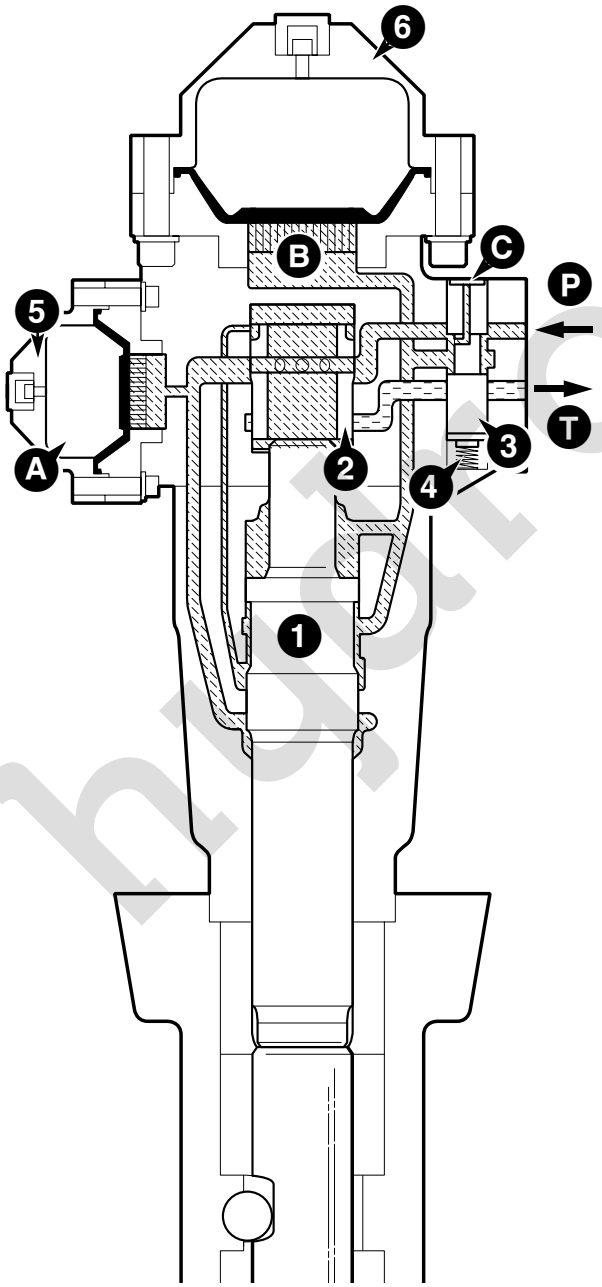

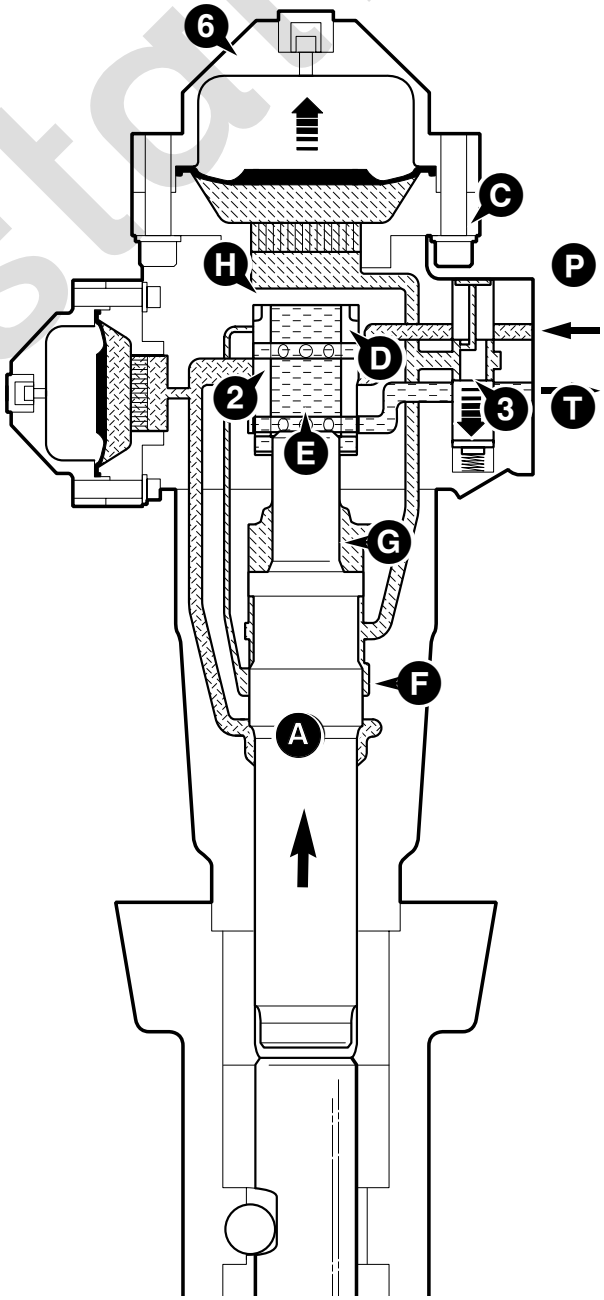

360 HAMMERMASTER (continued)

Principle of Operation III - Piston Stroke

In the upper position piston shoulder **F** opens the high pressure circuit to distributor area **H** through a pilot channel **7**. The force acting on area **H** forces the distributor **2** to its lowest position, connecting the inlet pressure to the piston head area **E**. This balances the force on piston shoulder **F** allowing the low pressure force acting on shoulder **G** to accelerate the piston **1** downwards.

During the piston stroke, high pressure acting on distributor area **H** is greater than the force on distributor area **D** (always high pressure). When the pilot channel **7** allows distributor area **H** to connect with the piston area **G** the distributor **2** moves upward and the piston **1** starts another cycle.

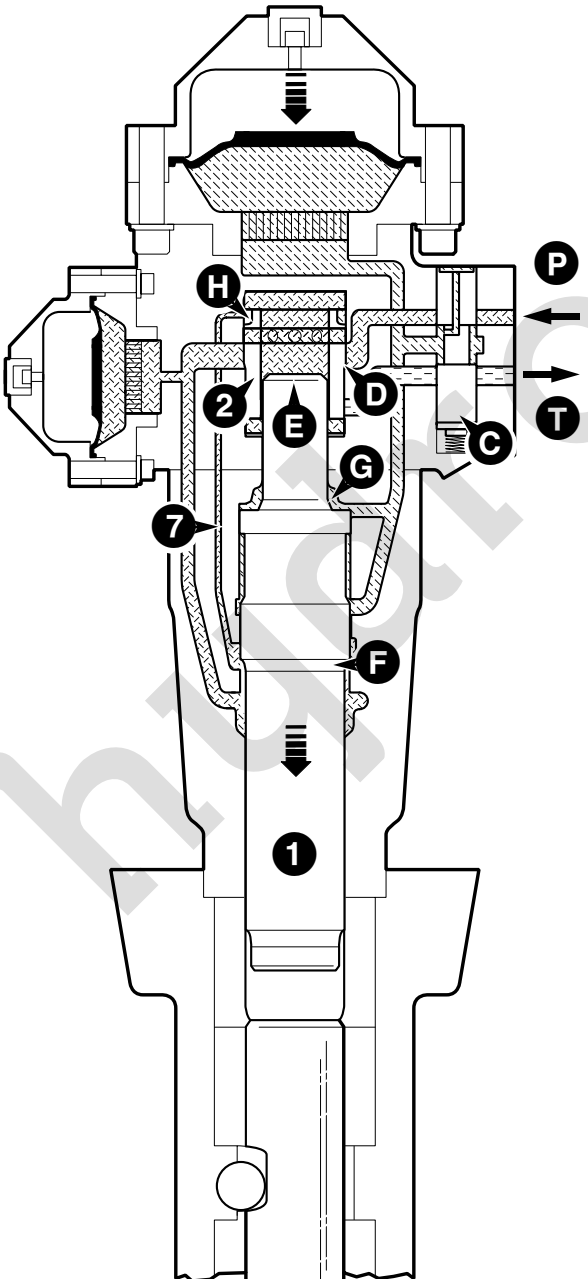

Principle of Operation IV - Pressure Adjusting Valve (PAV) Operation

X Hammer under low pressure - **Principles of Operation I**

Y Hammer - Normal Operation - **Principles of Operation II**

Z Constant Blow Energy - **Principles of Operation III.**

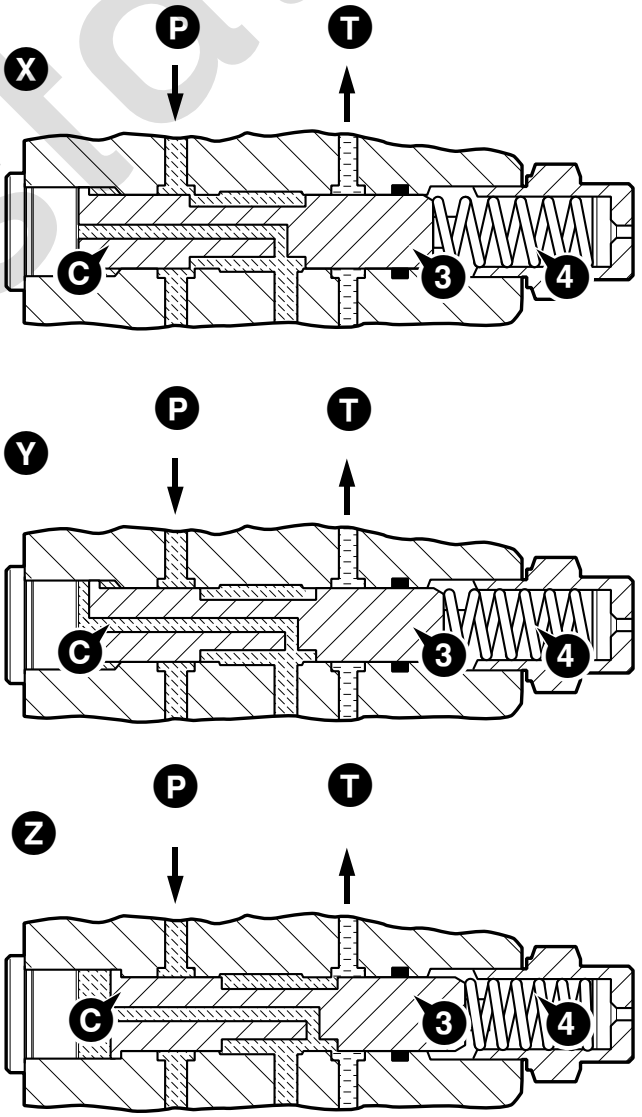

0774

360 HAMMERMASTER (continued)

Safety First

WARNING

Maintenance work must only be done by competent personnel.
A-3-1-1

WARNING

Equipment Condition
Defective equipment can injure you or others. Do not operate equipment which is defective or has missing parts.

Make sure the maintenance procedures in this manual are completed before using the equipment.
A-1-4-1

WARNING

Before doing any routine maintenance work on the attachment while it is installed on a carrier, make the carrier safe. Stop the engine and, if appropriate, ensure that the parking brake is engaged and the drive is in neutral. Remove the starter key to prevent the engine being started.
B-3-1-2/3

Lubricants

In the EEC all JCB lubricants are covered by individual COSHH (Control of Substances Hazardous to Health) leaflets which are available ***on request*** from your JCB Distributor.

It is most important that all personnel concerned with lubricants read and understand the information contained in the relevant leaflets.

Main Inspection

We recommend that the following inspection is done during the first 50 - 100 hours of operation of a new Hammermaster installation. It is advisable to have this work done by your JCB Distributor.

Check

1 Torque tightness of mounting side plates securing bolts/nuts.

2 All hydraulic connections.

3 For hoses rubbing against carrier (throughout range of rotation of the Hammermaster).

4 Hammermaster operating pressure (see *SPECIFICATION section*).

5 Hydraulic oil temperature during continuous operation (see *SPECIFICATION section*).

6 Hammermaster efficiency, impact rate and evenness of operation.

7 Lower tool bushing for wear (see **Lower Tool Bushings and Tools**).

8 Tool and retaining pins.
(Check for cracks on the tool retaining pins due to blank firing. Check retaining pins for large burrs. Do not re-use if excessively burred.)

Change

9 The carrier hydraulic filter(s).

Obtaining Replacement Parts

We recommend that you fit only genuine JCB replacement parts. Your distributor will need to know the equipment's serial number, which is stamped on the Hammermaster data plate (see *GENERAL DESCRIPTION section*).

Washing

Periodically, and before doing any maintenance work, we recommend that the outside of the Hammermaster is steam-washed. Ensure that the pressure and return lines are plugged before washing, to prevent ingress of moisture.

360 HAMMERMASTER (continued)

Service Schedules

To make sure your Hammermaster keeps working to maximum efficiency, it is essential that it is properly and regularly maintained in accordance with the service schedules included in this manual.

Badly maintained equipment can be a danger to the operator and the people working around him. Make sure that the regular maintenance and lubrication jobs listed in the service schedules are done to keep the equipment in a safe and efficient working condition.

Do not use equipment which is due for a service. Make sure that any defects found during the regular maintenance checks are rectified before you use the equipment.

Daily

Clean

1 The Hammermaster, its tools, its hoses and quick release couplings.

Grease

2 The Hammermaster pivots.

3 The tool bushings via the grease nipple (see ***Greasing, Tool Bushing***).

Check (engine stopped)

4 For damage to the Hammermaster, its tools and its hoses. Tighten loose fasteners and connections.

5 The torque tightness of the side plate securing bolts.

Observe (Hammermaster operating)

6 Operating pressure, hydraulic oil temperature, blow efficiency and evenness of operation.

Weekly

Do the Daily jobs plus:

Check (engine stopped)

1 The retaining pins and tool shank for burrs. Remove burrs if necessary.

2 That the tool and bushing have received adequate greasing. Note that if the lower tool bushing and the tool shank wear the hammermaster should be greased more frequently.

3 The lower tool bushing for excessive wear.

4 The tool shank for excessive wear and scoring.

5 The hydraulic hoses - renew if necessary.

Every 500 Hours or Yearly
(whichever occurs first)

This annual service is best carried out by the JCB Distributor.

1 Overhaul the Hammermaster.

2 With the Hammermaster installed on the carrier, measure the circuit oil flow and back pressure *(see SPECIFICATION section)*.

3 Renew hydraulic filters of carrier.

4 Check hoses do not foul the boom/dipper throughout their ranges of movement.

5 Check operating pressure, hydraulic oil temperature, blow efficiency and evenness of operation.

6 Renew Hammermaster warning decals.

7 Check accumulator and recharge if necessary.

⚠ WARNING

The accumulator(s) in the hammermaster are pressurised even when there is no hydraulic pressure to the breaker. Never tamper with an accumulator. Attempting to dismantle an accumulator without first releasing the pressure can cause injury or death. Such work should only be carried out by qualified servicing personnel who have studied the relevant Service Manual.

B-1-3-7

Note: Service intervals should be reduced in certain applications, such as hammer tunnelling, scaling, smelter cleaning and underwater use. If in doubt, consult your JCB Distributor.

360 HAMMERMASTER (continued)

Greasing

The Tool Bushings
(Daily†)

Position the Hammermaster vertically with its weight on the tool. Make sure the carrier parking brake is engaged, the drive is in neutral and the engine stopped. Remove the starter key.

Inject **JCB Special Hammer Grease** or equivalent into the grease point **A** (identified with the decal shown) using the grease gun supplied: Six shots should normally be enough.

Note: Make sure that the tool is kept fully up in its housing during greasing, to prevent grease filling the cavity between the piston and the tool.

† The actual frequency of this job will depend on operating conditions and the material being worked. If inspection reveals that the greasing has been insufficient, grease more often.

Hammermaster Pivots
(Daily)

Use a grease gun to inject **JCB 'Special' MPL Grease** into the pivot grease points **C**.

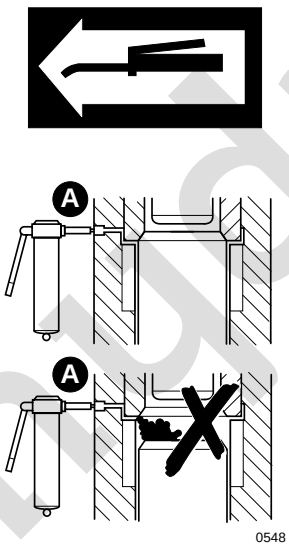

Check Bolt Tightness
(Daily)

It is important that the bolts **B** are checked for torque tightness. The correct torque tightening figures are given below. When tightening the bolts the nut must be held and the bolt turned. Turning the nuts will reduce the effectiveness of the lock washers.

Torque Settings

Item	Qty	Nm	lbf ft	kgf m
B	6	580	428	58

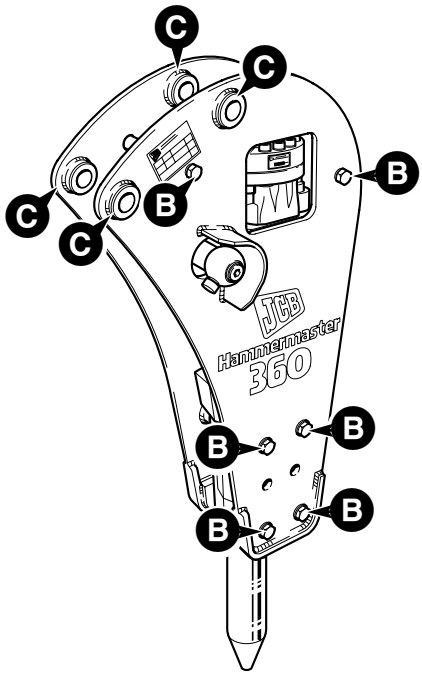

360 HAMMERMASTER (continued)

Lower Tool Bushing and Tools

Checking For Excessive Wear

1 Remove the tool as described in **Tools - Installing and Removing**.

2 The original tool shank diameter is 70 mm. If the diameter at any point is less than 68 mm, obtain a new tool. If the tool is oval renew it.

3 The original inside diameter of the lower tool bushing is 70 mm. If the indicating groove exceeds 72 mm, the bushing should be renewed. If the bore becomes oval renew the bushing.

4 If the cross hatched grooves in the bushing have disappeared (even in patches) replace the lower tool bushing.

5 Renew the lower tool bushing, if necessary, as described in **Lower Tool Bushing**.

Checking For and Removing Burrs

1 Remove the tool as described in ***Tools - Removing and Installing***.

2 Check for burrs on the tool's shank and the retaining pin.

3 Carefully remove all burrs. Do not overheat the tool.

⚠ CAUTION

Protect yourself when removing burrs. Wear safety glasses and industrial gloves.
B-3-1-4/1

4 Smear the tool's shank and the bushing with **JCB Special Hammer Grease** before installing the tool.

Lower Bushing - Removal

1 Remove the Hammermaster from the carrier machine.

2 Remove the tool as described in **Tools - Removing and Installing**.

3 Remove roll pins **A**.

4 Using an extractor tool, withdraw lower tool bushing **B** together with seal **C**.

Lower Bushing - Replacement

1 Apply MoS_2 spray to the contact surfaces of the bushing and the nose.

2 Install the bushing and insert roll pins **A**.

3 Fit a new seal **C**. Ensure that the seal is pressed in square to the housing.

4 Fill the holes in the sideplates for roll pins **A** with silicone sealant.

5 Install the tool as described in **Tools - Installing and Removing**.

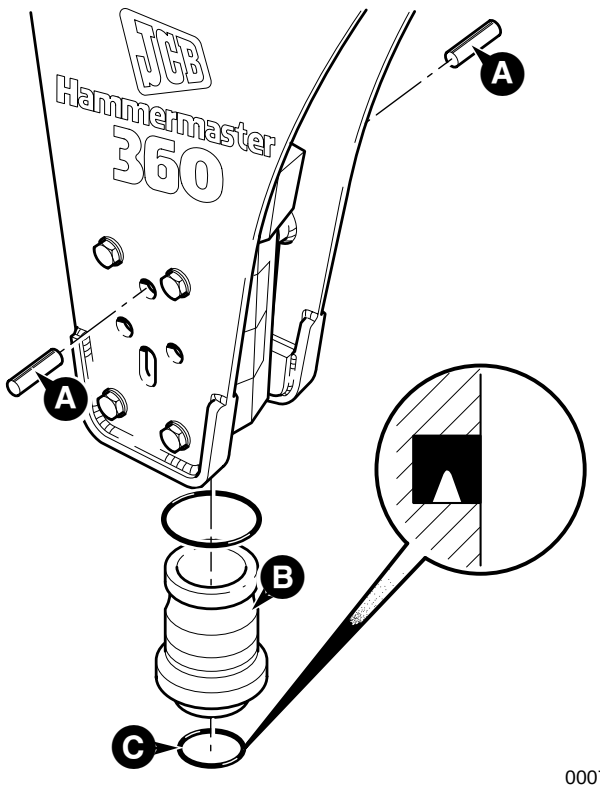

0007

360 HAMMERMASTER (continued)

Storage

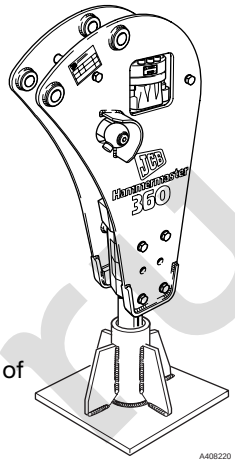

Note the following points when preparing the Hammermaster for long term storage.

1 Ensure that the storage area is dry.

2 **REMOVE THE TOOL.**

3 Liberally coat the lower end of the piston, the tool(s) and the bushings with grease.

4 Seal off the hose connections to prevent ingress of dirt and moisture.

5 **STORE THE HAMMERMASTER IN A VERTICAL POSITION.** If you have no method of storing verically it is recommended that you locally manufacture and stand as illustrated.

6 Make sure the Hammermaster is supported rigidly.

7 If the Hammermaster remains unused for six consecutive months, the attachment must be completely re-sealed.

Specification

	360
Working weight (including tool)	425 kgs (937 lbs)
Impact energy	730 joules (538 ft lb)
Impact rate (frequency)	600 - 1800 blows/mins
Operating pressure	100 - 130 bar (1450 - 1885 lbf/in^2)
Pressure relief - minimum	150 - 190 bar (2177 - 2758 lbf/in^2)
Pressure relief - maximum	220 bar (3190 lbf/in^2)
Oil supply	50 - 150 l/min
Maximum acceptable return line back pressure	30 bar (435 lbf/in^2)
Port adaptors - Hammermaster/connecting hoses	
Pressure line	$^3/_4$" BSP
Return line	$^3/_4$" BSP
Oil	
Temperature range	-20 to +80 ^{o}C (^{o}F)
Viscosity	1000 - 15 cSt
Carrier weight	5 - 8.5 tonnes (11000 - 15700 lbs)
Tools	
Length - moil point	730 mm (28.76 in)
Length - chisel	730 mm (28.76 in)
Bushings	
Diameter (new)	70 mm (2.75 in)
Diameter (maximum allowable)	72 mm (2.83 in)

360 HAMMERMASTER (continued)

Accumulator charging pressure	
HP	40 bar (580 lb/in²)
LP	10 bar (145 lb/in²)
Noise	85 dB (A) at 30 - 50 m
JCB Nitrogen Kit part number	892/00823

Carrier Requirements

Carrier weight limits - tonne	5 - 8.5
Carrier hydraulic supply ARV limits - bar	100 - 130
Carrier hydraulic supply flow limits - litres/min	50 - 150

Note: Ensure that the carrier cannot exceed 150 l/min. This can be done by fitting a flow restriction valve or marking the engine speed dial. Excess flow can cause permanent damage to the Hammermaster.

Additionally during Hammermaster operation the carrier's hydraulic circuit must be capable of maintaining the oil temperature between the limits - 20 °C + 80 °C (- 4 °F + 176 °F).

Note: Faulty installation may cause premature and possible permanent damage to the Hammermaster. For this reason, we strongly recommend that installation is carried out by your JCB Distributor.

SWEEPER COLLECTOR

Equipment Supplied

The Sweeper Collector is supplied as a complete unit with hoses, quick release couplings and options as required. It may also incorporate an optional water sprinkler and/or gutter brush.

Attachment Identification

Always quote the serial number stamped on the Sweeper Collector rating plate **X** when requesting information or replacement parts.

Component Identification

A Brush Drive Motor
B Brush Height Adjustment
C Front Castor
D Hopper Closing/Opening Cylinder
E Canopy
G Hydraulic Control Valve
H Brush Sealing Strip
J Hydraulic Hoses

Note: *The brush drive **A** is shown mounted for a left hand drive sweeper. For a right hand drive sweeper the brush drive is mounted on the opposite side of the sweeper.*

Note: *The Sweeper Collector is shown below with a Quickhitch. A Quickhitch Frame can be supplied as a separate item.*

X

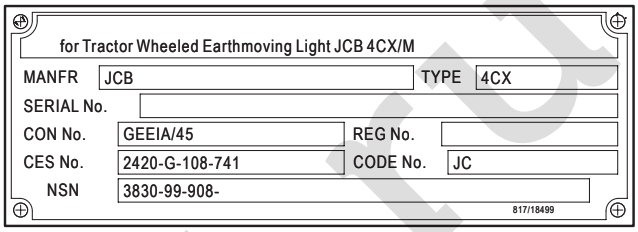

A407810

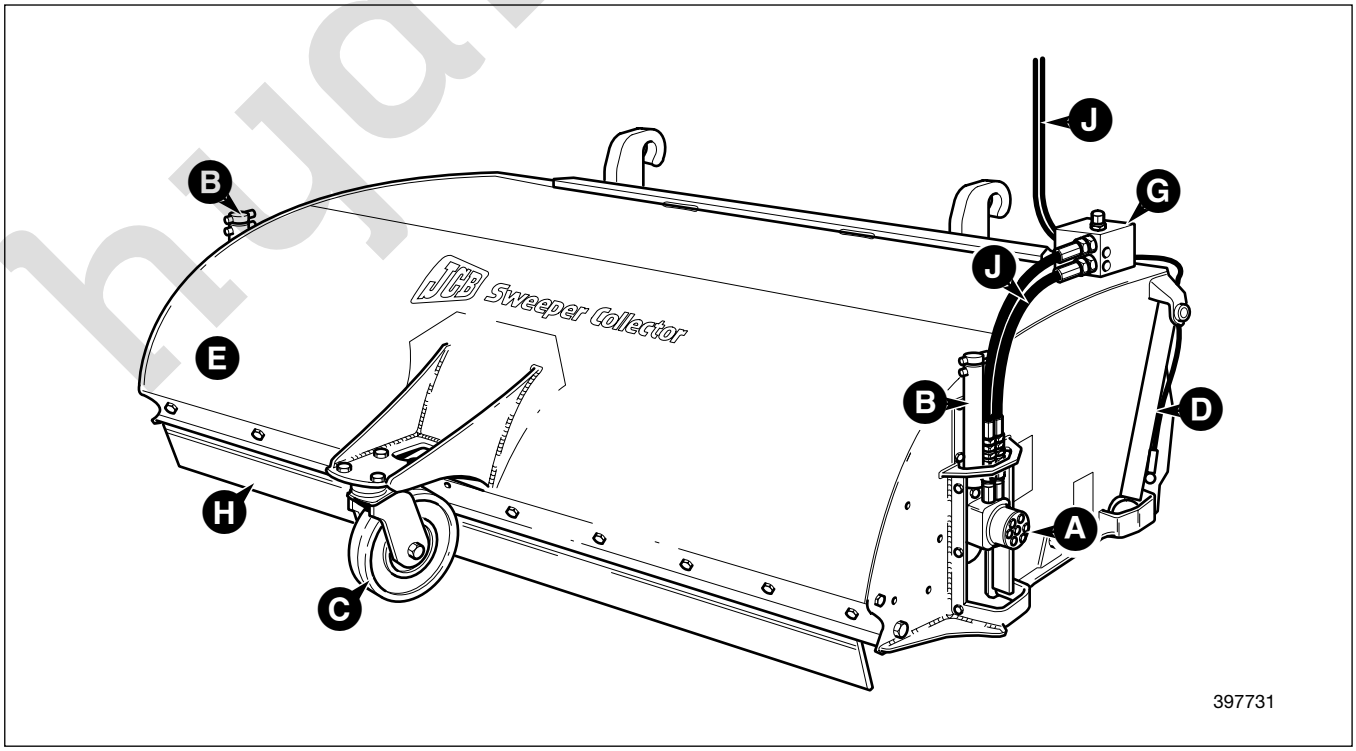

SWEEPER COLLECTOR

Safety First

WARNING

The Sweeper Collector is fitted with safety guards for your protection. Never remove the safety guards whilst the Sweeper Collector is running. If the safety guards are removed for any reason they must be replaced before commencing operations.
B-1-2-17

WARNING

Prolonged running can cause hydraulic components to heat up. Skin contact with these components must be avoided.
B-1-2-18

WARNING

Beware of overhead obstructions and electrical cables when raising the Sweeper Collector. When the attachment is raised never walk beneath it for any reason.
B-1-2-19

WARNING

Wear safety goggles or a face shield during operations if your machine has an unglazed cab.
B-1-2-20

WARNING

Brush ‘fill’ material can be sharp, always wear gloves when handling the brush or segments.
B-1-2-21

CAUTION

Do not force the sweeper into the ground using machine hydraulic functions such as hopper or boom/loader controls. The brush footprint must be set up using the correct procedures detailed in this Manual. Failure to follow these procedures can result in serious damage to the sweeper.
D-1-1-8/1

CAUTION

Do not store polypropylene brushes in direct sunlight. The material can deteriorate and crumble before the bristles are worn out.
B-1-2-23

CAUTION

Do not store the sweeper with weight on the brushes. Weight will deform them, destroying the sweeping effectiveness. To avoid this problem use stands.
B-1-2-24

CAUTION

Keep polypropylene brush material away from intense heat or flame.
B-1-2-25

CAUTION

Avoid serious injury - lower and stop the Sweeper Collector, set the parking brake, stop the carrier engine and remove the key before leaving the operator’s seat for any reason.
B-1-2-22

WARNING

Make sure you know the weight of the attachment before lifting or placing it.

Do not exceed the safe working load of your machine. Do not angle or extend the boom outside the limits shown on The Load Charts in the cab. See *Using the Load Charts and Boom Indicators* in the machine Operator Manual
0006

Note: For attachment weight and hopper capacities, see ***Sweeper Collector - Specifications***.

SWEEPER COLLECTOR

Safety Decals

The following decals are fitted to the Sweeper Collector.

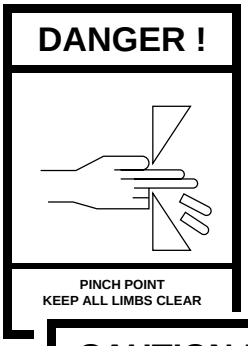

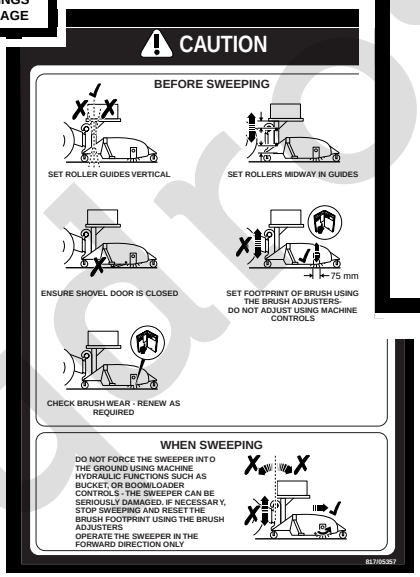

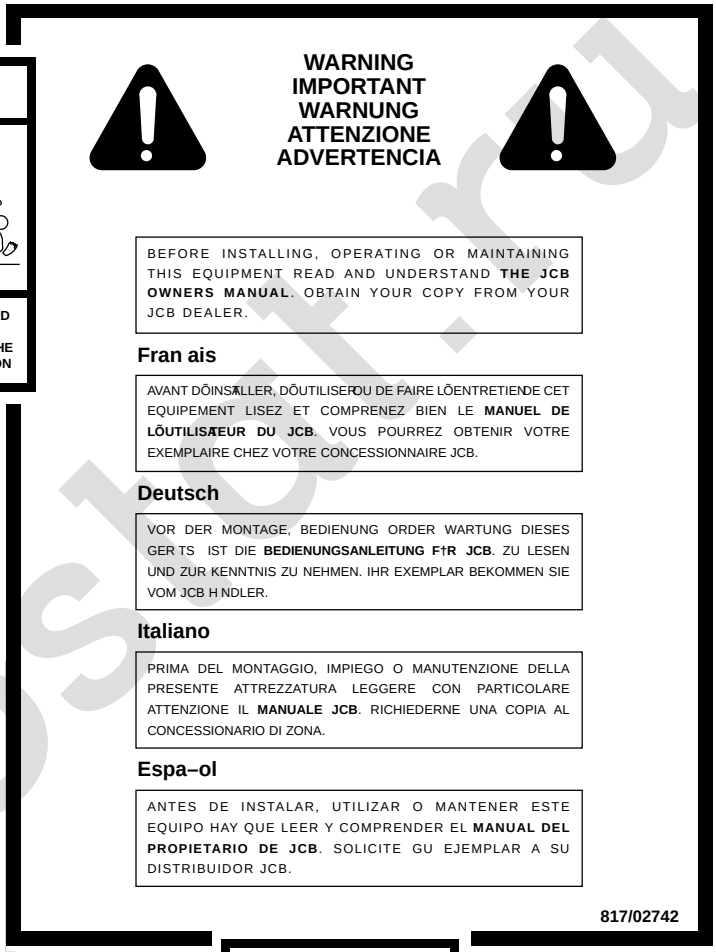

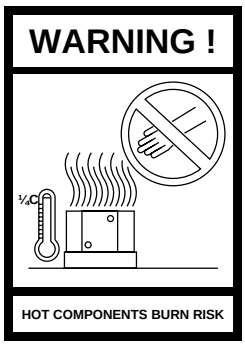

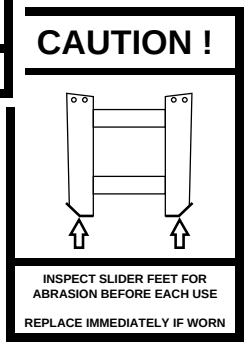

CAUTION

FAILURE TO FOLLOW SAFE OPERATING PROCEDURES MAY RESULT IN INJURY

1. READ OPERATORS MANUAL
2. KNOW LOCATION AND FUNCTION OF ALL CONTROLS
3. BEFORE LEAVING OPERATORS POSITION
A. SET PARKING BRAKE
B. SHUT OFF ENGINE AND REMOVE KEY
4. WAIT FOR MOVEMENT TO STOP BEFORE SERVICING MACHINE
5. ALWAYS REPLACE GUARDS AFTER SERVICING MACHINE
6. NEVER CARRY PASSENGERS, KEEP PEOPLE AND ANIMALS A SAFE DISTANCE AWAY FROM THE MACHINE
7. KEEP GUARDS AND SAFETY DEVICES IN PLACE AND WORKING.

0969A

SWEEPER COLLECTOR

Installing/Removing

Quickhitch Mounting

Installing

1 Using the instructions detailed in this section, attach the Quickhitch to the Quickhitch mounting frame.

Note: *Prior to use, inspect sleeved bolts **A** for damage and location, check the slider feet **B** for wear.*

2 The Sweeper Collector can now be lifted using the Quickhitch.

Removing

Removal is a reversal of the installing process.

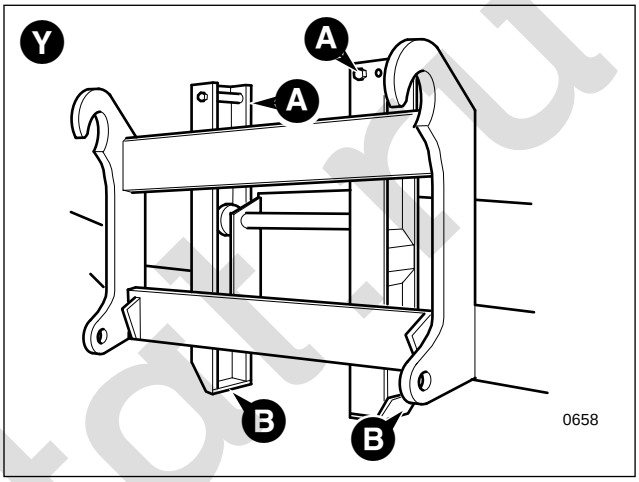

SWEEPER COLLECTOR

Connecting the Hydraulics

Note: *Refer to* **Quick Release Couplings**, *this section.*

The connection of the tail hoses is basically the same for all three methods of mounting unless specified.

1 Ensure that the Sweeper Collector is lowered onto level ground, with roller guides vertical and all castors on the ground. Switch off the carrier machine's engine and remove the key. Ensure that the parking brake is engaged.

2 Operate the auxiliary controls several times to vent all pressure in the system.

3 Connect the two tail hoses using the quick release couplings (see ***Quick Release Couplings***).

4 With Quickhitch mounted Sweeper Collectors, route the hoses over the top of the Quickhitch and secure them in the frame **C** using pins **D** as shown at **B**.

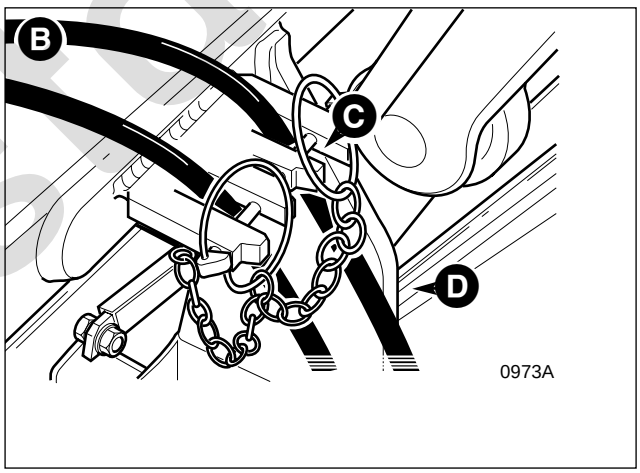

Disconnecting the Hydraulics

Disconnection is a reversal of the connection process, but it is essential that all pressure in the system is dissipated before disconnection.

⚠ CAUTION

It is important to route hydraulic hoses between the attachment and carrier machine so that they will not become chaffed or trapped.

B-1-3-8

SWEEPER COLLECTOR

Preparing for Use

It is assumed that the Sweeper Collector is correctly attached and hydraulically connected to the carrier.

1 Raise the Sweeper Collector approximately 500 mm (20 in).

2 If the hopper door **C** is open, operate the carrier controls to start the brush rotating.

3 The hydraulic valve has a sequence cartridge which first closes the hopper door **C**, then starts the brush **D** rotating (anti-clockwise when viewed as at **A**).

4 If the hopper door was closed then the brush should start rotating immediately.

5 Stop the brush rotating and operate the attachment controls to 'dump'.

6 The hopper door **C** should open.

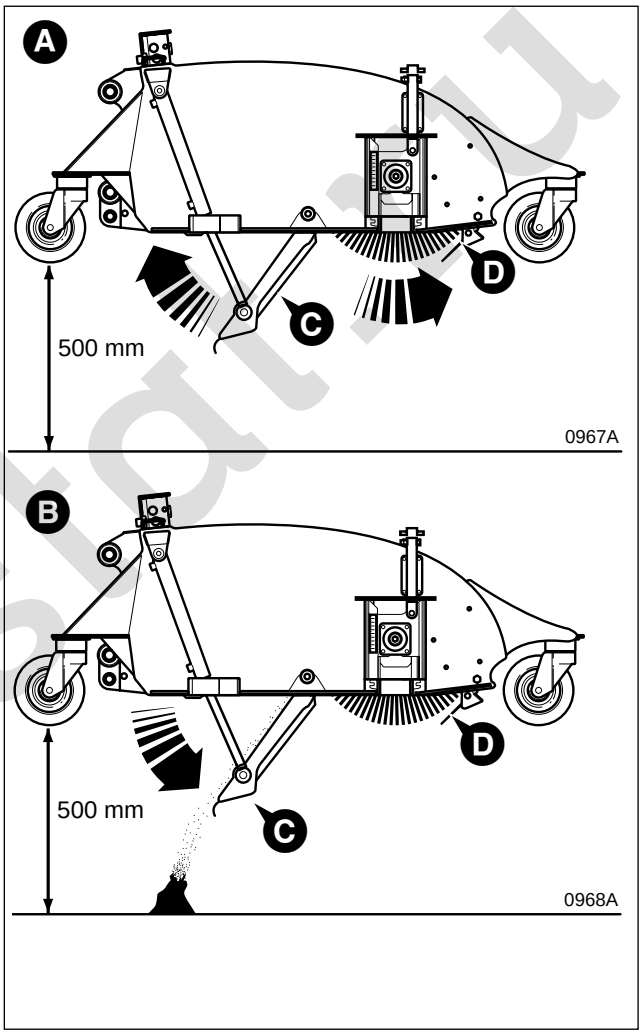

⚠ CAUTION

Wait for the brush to stop rotating when de-selecting sweeping mode and engaging dump mode.

- **Stopping/starting brush erratically can cause hydraulic motor damage.**
- **Never select or change operating modes at high revs.**

B-1-2-26

Note: Sequence of operations should be -

A Sweeping Mode - Close hopper door then brush rotates.

B Dumping Mode - Open hopper door.

Once the correct mode of operation has been established, the Sweeper Collector is ready for use.

⚠ WARNING

Beware of overhead obstructions and electrical cables when raising the Sweeper Collector. When the attachment is raised never walk beneath it for any reason.

B-1-2-19

SWEEPER COLLECTOR

Sweeping Mode

1 Lower the Sweeper Collector slowly to the ground. Ensure all three castors contact the ground and the **mounting frame is vertical**.

⚠ CAUTION

Do not force the sweeper into the ground using machine hydraulic functions such as hopper or boom/loader controls. This brush footprint must be set up using the correct procedures detailed in the Owners Manual. Failure to follow these procedures can result in serious damage to the sweeper.
D-1-1-8

2 Continue to lower the hitch vertically a further 50 - 75 mm (2 - 3 in). This will allow the Sweeper Collector a degree of vertical 'float protection' in either direction, enabling it to follow ground contours.

Note: To prevent premature wear during operation, contact between the ground and the slider feet of the Quickhitch mounting frame should be avoided.

3 Engage 'Sweeping Mode' (see ***Preparing For Use***).

Note: *Never engage the brush with high carrier engine speed as this can cause damage both to the Sweeper Collector and the carrier.*

5 For best sweeping results, drive forward at a speed of approximately 5 - 6$^1/_2$ km/hr (3 - 4 mph).

Note1 : *As the brush wears, it will require adjustment (see* **Adjusting Brush Height** - MAINTENANCE section*).*

Note 2: *A sweeper collector must not be used for more than 30 minutes unless high flow auxiliary service connectors are fitted. Allow the hydraulic system to cool for 30 minutes between each period of use (see machine Operator Handbook)*

Sweeping Hints

1 Always obey safety regulations (see ***Safety Check List***).

2 Do not try to sweep debris which is obviously too big for the Sweeper Collector. Most debris of up to about 50 mm (2 in) in diameter can be classed as suitable.

3 Trying to sweep debris that is too large may cause jamming along the front of the machine, possibly resulting in damage to the front rubber flap. Remove large debris from the sweeping area before using the Sweeper Collector.

4 Avoid catching the hopper door cylinders **A** on obstructions, as this can lead to serious damage.

5 Try to avoid sweeping too close to a kerb as this can often result in collisions and damage to the motor guards **B**.

6 If kerb sweeping is required, a gutter brush should be fitted (see *OPTIONAL ATTACHMENTS*). The head of the gutter brush travels along the kerb edge, sweeping debris into the path of the main brush. Consequently the main body of the Sweeper Collector is allowed to remain at a 'safe' distance from the kerb edge.

7 A water sprinkler system is recommended to act as a dust suppression kit in dry and dusty environments (see *OPTIONAL ATTACHMENTS*).

Dumping Mode

1 Allow brush to stop.

2 Raise the Sweeper Collector approximately 500 mm (20 in) and position over the prospective dumping location.

3 Reverse the auxiliary hydraulic flow to actuate 'Dumping Mode' (see ***Preparing for Use***). This will keep the brush from rotating and allow the hopper door to open.

4 Allow the hopper contents to fall into the dumping area. Hose out the hopper to clear any 'sticking' material. **DO NOT** venture beneath the sweeper.

Note: DO NOT *allow swept material to stand in the hopper for any length of time (i.e. overnight) as it can set hard, making dumping difficult.*

5 Reverse the hydraulic flow to the Sweeper Collector to close the hopper door.

6 Stop all hydraulic flow to the Sweeper Collector and lower it to the ground.

Note: *Never actuate 'Dumping Mode' when the Sweeper Collector is on the ground and never move the machine on the ground with the hopper door open.*

SWEEPER COLLECTOR

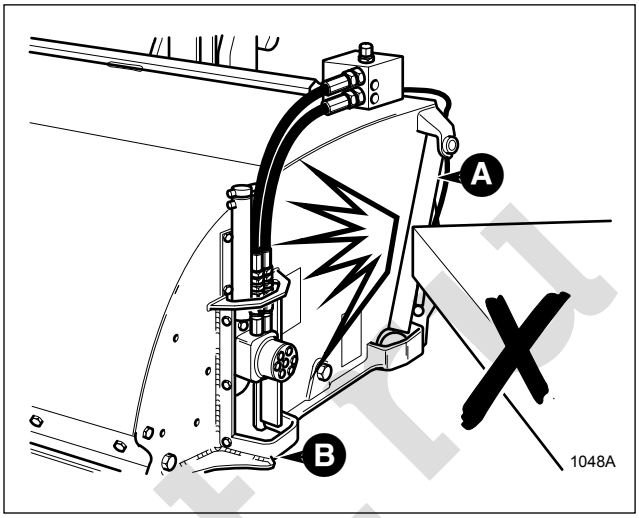

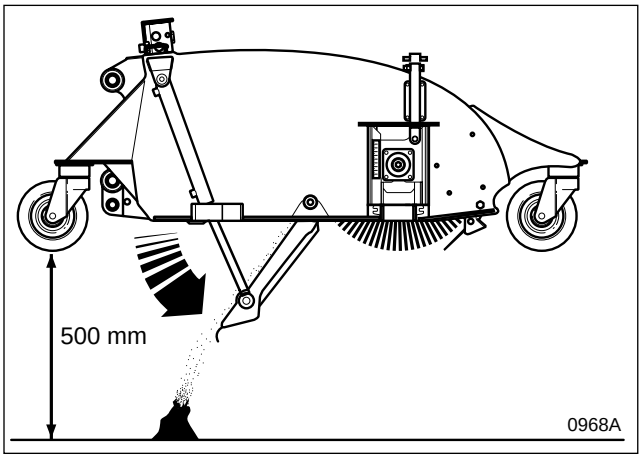

0983A

SWEEPER COLLECTOR

Fault Finding

Symptom	Possible Fault	Remedy
The brush rotates freely when raised, but slows or stalls dramatically when trying to sweep.	Brush incorrectly adjusted.	Check Brush Adjustment (see ***Adjusting Brush Height***).
	Trying to sweep too much material in one sweep.	See ***Sweeping Hints***.
	Incorrect flow and pressure settings for the hydraulic system.	See Carrier Owners Manual and check against Sweeper Collector specifications.
	Incorrect settings on the combination valve.	See ***Combination Valve***.
	Sweeper Collector may not be latching correctly.	Try reversing the hydraulic flow quickly back and forth in order to 'hit' the latching pressure. See your JCB Distributor if problem persists.
Hopper door closes but brush fails to rotate or rotates slowly.	Sweeper Collector Valve needs adjustment.	See ***Combination Valve***.
Brush rotates before hopper door is fully closed.	Sweeper Collector Valve needs adjustment.	See ***Combination Valve***.
Small amounts of debris are being left by the Sweeper.	Forward travel speed too fast.	Adjust speed to 5 - 6/5 kph (3 - 4 mph).
	Brush height adjustment incorrect.	See ***Adjusting Brush Height***.
	Brush sections worn.	See ***Renewing Brush Segments***.
	Front rubber flap worn or jammed by large debris.	See ***Sweeping Hints***.
	Hydraulic flow rate too low.	See ***Specification*** and Owners Manual.
	Trying to move too much material in one pass.	See ***Sweeping Hints***.
A trail of debris is being deposited between the gutter brush and the main brush.	Gutter brush incorrectly adjusted.	Readjust gutter brush.
	Trying to sweep too much material.	See ***Sweeping Hints***.
	Hydraulic flow rate and pressure settings are incorrect in the carrier circuit.	See **Hydraulic Section** Carrier Service Manual.

SWEEPER COLLECTOR

Fault Finding (cont'd)

Symptom	Possible Fault	Remedy
The gutter brush scribes fully circular patterns in the dust and deposits swept material to the rear of the gutter brush instead of sweeping it into the path of the main brush.	The angle of the swivel head is too shallow.	Increase the angle so that the front outside and leading edges of the gutter brush are in contact with the ground.
An area of unswept material remains between the gutter brush and the main brush.	The brush to ground contact is too small.	Reduce the swivel head angle to increase brush contact.

Hydraulic Combination Valve

Note: *The valve supplied with all standard Sweeper Collectors is of the combination type, and consists of a number of valves housed in a single manifold block. The sequence valve is the only one of these valves which may need to be adjusted by the user and can be identified by the markings CT2.*

When initiating 'Sweeping Mode', the hopper door closes, but the brush fails to rotate (or rotates extremely slowly).

2 The Sweeper Collector sequence valve needs to be adjusted to suit your particular carrier/sweeper combination. This can be done by the operator and is a one off adjustment as follows:

a Insert a suitable Allen key into the valve adjustment screw **A** and hold in position whilst slackening the locknut **B** anti-clockwise.

b Unscrew the adjuster screw **A** 1/4 turn anti-clockwise.

c Test the Sweeper Collector by engaging 'Sweeping Mode', and if operation is satisfactory tighten the locknut **B** clockwise.

d If the problem persists repeat the above procedure.

Note: *It may be necessary to experiment with the adjuster screw position to achieve correct operation. Always ensure that any adjustments made are in small increments to avoid over adjustment. (Refer to JCB Attachments for information.)*

When initiating 'Sweeping Mode', hopper stays open and the brush begins to rotate.

3 Refer to the instructions above, but this time screw in the adjuster screw 1/4 turn clockwise.

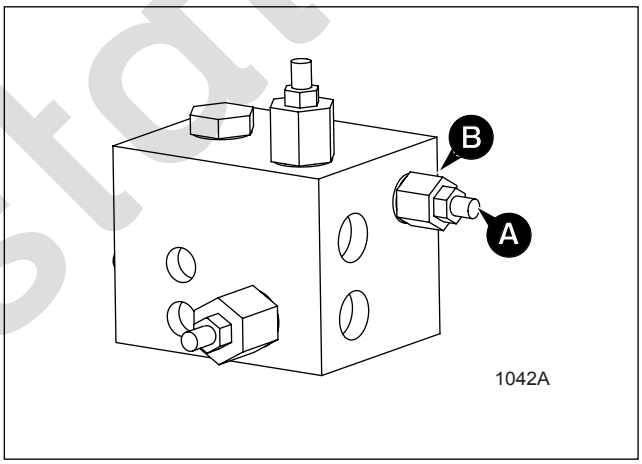

SWEEPER COLLECTOR

Travelling with the Sweeper Collector

On Site

Raise the carrier loader arm so that the attachment is approximately 200 mm (8 in) above the ground. When moving around the site follow as level a route as possible.

⚠ WARNING

Never travel at excessive speed over rough terrain. The resulting loss of control could cause the carrier to tip over. This could lead to death or serious personal injury as well as damage to the attachment and/or carrier.

B-1-2-11

On a Truck

The safe transit of the load is the responsibility of the transport contractor and driver. Any machine, attachments or parts that may move during transit must be adequately secured.

5-2-5-9

Note: *Before transporting the machine make sure you will be obeying the rules and laws of all the areas that the machine will be carried through.*

Make sure that the transporting vehicle is suitable. See ***Static Dimensions*** *(SPECIFICATIONS section of the* ***Machine Operator Manual****) for the dimensions of your machine.*

⚠WARNING

Before moving the machine onto the trailer, make sure that the trailer and ramp are free from oil, grease and ice. Remove oil, grease and ice from the machine tyres. Make sure the machine will not foul on the ramp angle. See Static Dimensions in SPECIFICATIONS section for the minimum ground clearance of your machine.

2-2-7-5/1

Note: *Your attention is drawn to the UK Road Traffic Regulations with regard to 'Bridge Bashing'', which refers to travelling heights of the machine, and these heights must be displayed in the cab of the machine.*

New regulations are now in force (since 1st April 1998) regarding the fitting of high level equipment to machines and travelling or working on public highways. It is the responsibility of the user to ensure that these regulations are met.

⚠ WARNING

Water, mud, ice, grease and oil on ramps or trailers can cause serious accidents. Make sure ramps and trailers are clean before driving onto them. Use extreme caution when driving onto ramps and trailers. Always reverse up a ramp if unloaded, travel forwards if loaded. Always reverse down a ramp if loaded, travel forwards if unloaded.

3-1-1-3

1 Drive the carrier up the ramps and onto the truck after proceeding as described for **On Site**.

a If the attachment is being transported alone, lower the assembly to the floor of the truck. Remove from the machine (see ***Removing***) and drive the carrier off the truck. Secure the attachment to the truck using straps or chain of sufficient strength.

b If the attachment is being transported with the machine, lower the assembly to the floor of the truck and switch off the engine. Block the wheels and using the attachment points chain the carrier to the bed of the truck as shown in the illustration.

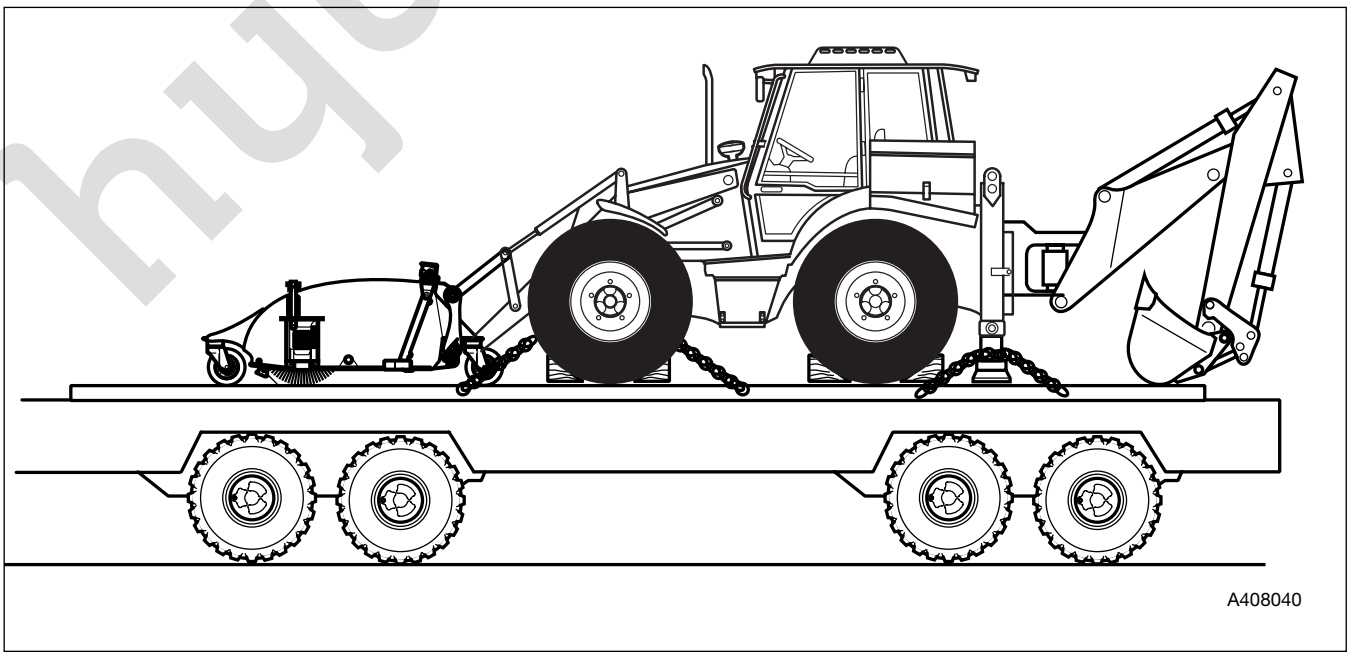

SWEEPER COLLECTOR

Routine Maintenance

⚠ WARNING

Maintenance must be done by suitably qualified personnel.
A-3-1-1

To make sure your JCB Sweeper Collector keeps working to maximum efficiency, it is essential that it is properly and regularly maintained in accordance with the service schedules included in this handbook.

Badly maintained equipment can be a danger to the operator and the people working around him. Make sure that the regular maintenance and lubrication jobs listed in the service schedules are done to keep the equipment in a safe and efficient working condition.

Make sure that any defects found during the regular maintenance checks are rectified before you use the equipment.

It is recommended that any major servicing or repairs are carried out by your JCB Distributor who will have the trained personnel. Such repairs/replacement could be such items as repair/replacement of hydraulic motors or valves.

Daily

Clean

1 The attachment and its hoses.

Check

2 For damage to the attachment and its hoses.

3 The brushes for excessive wear and check brush footprint (see **Adjusting Brush Height**).

4 The accessible wear parts for damage or wear.

5 That the hopper is empty.

6 The slider feet and retaining bolts on the Quickhitch mounting frame for wear and damage.

Grease

7 The brush shaft bearings (if fitted).

8 The castors (1 front, 2 rear).

Weekly

Do the Daily jobs plus:-

Check

1 The security of mounting bolts, pivot pins, retaining pins etc.

2 Hoses and couplings for security and leaks.

Grease

3 The brush adjustment handles.

4 The rollers on the slider frame.

5 The core driveplate and bearing plate runners.

Monthly

Do the Daily and Weekly jobs plus:-

Check

1 Hydraulic sequence i.e. Brush Stop - Hopper Open
Hopper Close - Brush Start

Problems with this sequence can be traced to the hydraulic valve, but such repairs must be referred to qualified service personnel such as your JCB Distributor.

Yearly

(or as necessary if problems arise) return the Sweeper Collector to your JCB Distributor for a major service and performance check.

SWEEPER COLLECTOR

Greasing

Note: There are 3 castors on the Sweeper Collector (2 rear, 1 front). The brush slide mechanism with its adjuster, is on each side of the machine.

In the following procedures use JCB Special MPL Grease or equivalent (to JCB Standard 4003/0200). The procedure intervals should be as specified in **Routine Maintainence**.

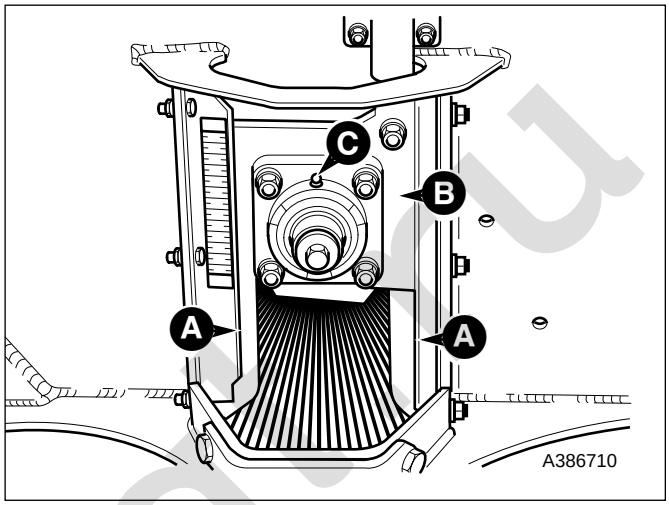

Core Drive Plate and Bearing Plate Runners

1 Grease the runner**s A** and plate **B**. (The illustration shows the bearing plate **B** and its runners **A**. These are similar on the drive plate side of the machine.)

Total 4 grease points.

2 Grease the brush shaft bearing at **C**. 2 - 3 shots from a grease gun should be sufficient. (If fitted with a grease nipple). **DO NOT** over grease.

1 grease point.

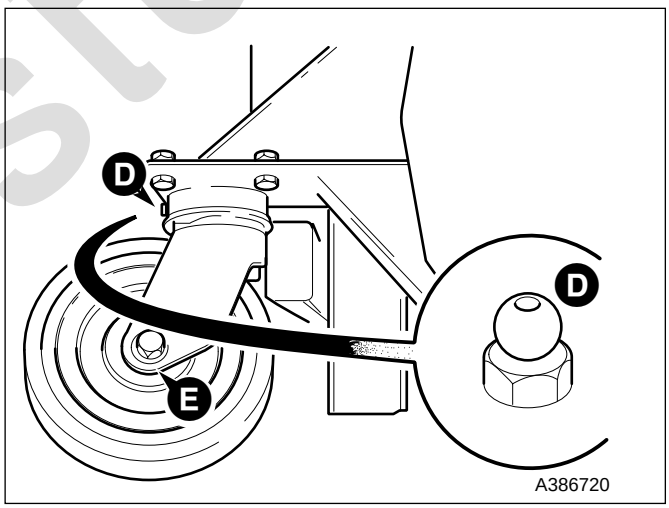

Castors

1 Grease the castors at the nipple **D**. Again 2-3 shots from the grease gun should be sufficient.

Total 3 grease points.

2 Grease both sides of the castor shaft **E**.

Total 6 grease points.

Brush Adjustment and Handles

1 Grease brush adjustment handles **F**.

Total 2 grease points.

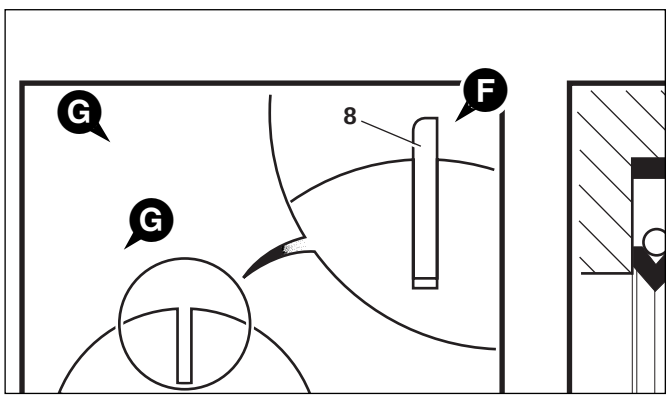

Mounting Frames

1 Oil the rollers **G** on the mounting frame.

Total 4 points.

SWEEPER COLLECTOR

Adjusting the Brush Height

Note: Brush adjusters and sliders are fitted to both sides of the Sweeper Collector.

1 Ensure that the Sweeper Collector hopper is empty.

2 Drive the carrier and attachment onto a flat level surface.

3 Lower the Sweeper Collector to the ground keeping the slider hitch **A** vertical. Ensure that all 3 castors **C** are on the ground (1 front, 2 rear).

4 Check that the height readings on the scale **B** (one each side of the attachment) are the same.

5 View the Sweeper collector from each side and check the brush to ground contact **X**. This is referred to as the brush 'Footprint' and should be 75 mm (3 in) along the full width of the brush 2.43 m (8 ft).

Note: It is a popular misconception that 'the more the brush is forced into the ground the better the sweep'. This is **NOT** true, and only serves to slow brush rotation and rapidly increase brush wear. It may also lead to structural damage to the sweeper.

6 If adjustment is required, remove the 'D' clips **D** from the adjuster handles **E**. Rotate the adjuster handles **E** anti-clockwise **Y** to lower the brush and clockwise **Z** to raise the brush.

7 Using the two scales **B** ensure that both ends of the brush are adjusted equally so that the brush is parallel to the ground.

8 Re-check the brush footprint **X**. When this is satisfactory re-fit the two 'D' clips **D**.

9 The Sweeper Collector should now be ready for operation.

Note: When the brush slide plates **F** reach their lowest position on the scales **B** the brush sections are worn out and must be renewed. Sweeping with a badly worn brush reduces the efficiency of the Sweeper Collector and increases the potential for machine damage.

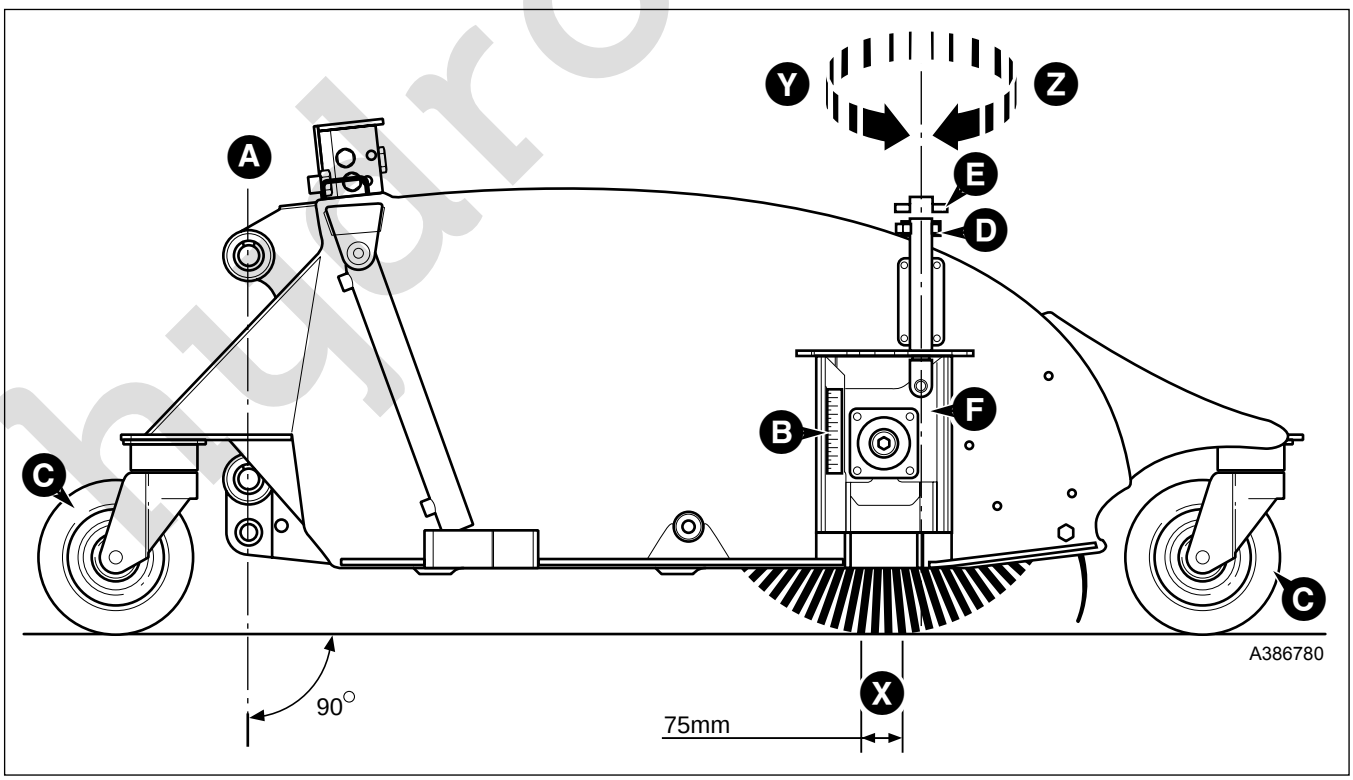

SWEEPER COLLECTOR

Storage

Polypropylene Brushes

⚠ CAUTION

Do not store polypropylene brushes in direct sunlight. The material can deteriorate and crumble before the bristles are worn out.
B-1-2-23

⚠ CAUTION

Do not store the sweeper with weight on the brushes. Weight will deform them, destroying the sweeping effectiveness. To avoid this problem use optional stands.
B-1-2-24

⚠ CAUTION

Keep polypropylene brush material away from intense heat or flame.
B-1-2-25

Sweeper Collector

⚠ WARNING

Avoid serious injury - lower and stop the Sweeper Collector, set the parking brake, stop the carrier engine and remove the key before leaving the operator's seat for any reason.
B-1-2-22

1. Drive the Sweeper Collector to a storage area.
2. Set the hopper on blocks to keep the brush off the ground.
3. Disconnect self sealing hydraulic lines.
4. Remove the Sweeper Collector from the carrier.
5. Move the carrier out of the storage area.

SWEEPER COLLECTOR

Specification

Height	0.81 m (2 ft 8 in)
Overall width	2.71 m (9 ft 0 in)
Working Width	2.43 m (8 ft 0 in)
Overall length	2.03 m (6 ft 8 in)
Weights	
980/88673 - Sweeper base unit (unladen)	583.5kg (1287 lb)
980/41100 - Quickhitch mounting frame (3CX/4CX)	107.5kg (237 lb)
- Gutter brush assembly	26 kg (57 lb)
Brush Assembly	
- Brush segment O/D	610 mm (2 ft 0 in)
- No. of segments	59 - Convolute, no spacers
- Type of bristles	Polypropylene, wire, or combination of both
Hydraulic Oil Flow @ min, pressure of	140 bar (2000 lbf in^2)
- litres /min	55 - 135 (12 - 30 gal/min)
Collector Capacity	0.60 m^3
Optional Attachments	
- Gutter brush	Fully floating C/W spray bar

MULTI PURPOSE SHOVEL

When the backblade has worn to such an extent that the backblade no longer functions, it can be removed and reversed.

When both side have worn beyond the limits the reversible backblade should be replaced.

1 Raise the loader arms so that the multi purpose shovel is at a convenient working height.

2 Open the clam fully, rotate the shovel until the backplate is level with the ground to prevent the backplate falling off when the bolts are removed.

3 Fit the loader lever control lock, see page 12. Remove the starter key and disconnect the battery to prevent the machine from being started.

4 Place a supports **A** under the shovel to prevent the loader arms from lowering. Place two supports **B** under the clam to prevent the clam from inadvertantly closing.

5 Use the 30mm socket and ratchet provided in the machine tool kit to remove the nuts **C**, spring washers **D**, plain washers **E** and bolts **F**.

Note: The backplate weighs 45kg (99lb) and requires 2 men to lift it.

6 With a person at each end of the backplate, remove the backplate. Rotate the backplate to the other side and place on the ground.

7 Remove soil and debris from the multi purpose welded toe plate, make sure the surface is clean so that the reversible backplate will make good contact.

8 Position the backplate on top of the welded toe plate, make sure the bolt holes are aligned.

9 Fit the bolts **F**, make sure the flats of the bolts are engaged correctly. Fit washers **E**, spring washers **D** and nuts **C**, tighten with the tools provided.

10 Reconnect the battery, remove the loader lever lock, start the engine.

Make sure the area is clear of all personnel, raise the loader arms, remove the supports, close the clam and lower the loader arms to the ground.

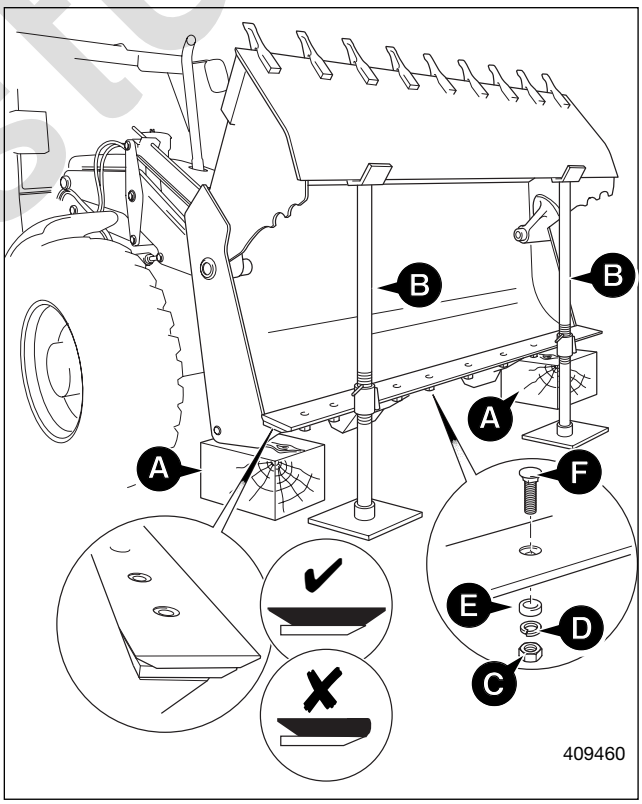

LIFTING (CRANING) REGULATIONS AND SAFE WORKING LOADS

Lifting Regulations

In the U.K., the Factories Act Construction (Lifting Operations) Regulations 1961 defines 'Backhoes' as 'Lifting Appliances'. As such, the JCB Backhoe Loader is subject to these regulations both when using the machine as an earthmover, and specifically when using the machine as a crane.

The owner and/or operator must make sure that he fully understands the laws and regulations concerning the use of the JCB Backhoe Loader as an earthmover and as a crane. Consult your JCB distributor for further information.

If your machine has not been fitted with an approved lifting point such as a hook or shackle then it must not be used as a crane. Use the machine for earthmoving purposes only.

Your machine may be used as a crane if it has been fitted with an approved lifting point such as a hook or shackle, if it has been tested, plated and certified for its safe working load, and if all other regulation requirements have been met (consult your JCB distributor).

Safe Working Loads

⚠ WARNING

The safe working load indicated on lifting accessories such as chains etc. is not the safe working load of the machine. Consult your handbook for the safe working load of the machine.

4-5-1-1

Backhoe Unit

When loads are to be lifted by the backhoe unit, a 800mm bucket must be fitted.

To obtain the safe working load of the backhoe unit, subtract the weight of the bucket from the safe working load - no bucket fitted, (see next page).

Loader Unit

In all cases the maximum load to be lifted by the loader unit when used as a crane is 1000kg (1 tonne, 2205lb).

For the safe working load of a fork attachment, see **Safe Working Loads - Forks**.

SAFE WORKING LOADS - FORKS

Loader

	Safe working load
JCB Sideshift Forks	1000kg (2205lb)

Note: The safe working load is at 500mm (20in) centres with a 800mm bucket fitted to the excavator.

SAFE WORKING LOADS - CRANING (NO BUCKET FITTED)

Backhoe

The following gives the safe working load with no bucket fitted, to calculate the SWL of the backhoe unit when a bucket is fitted. Do this by subtracting the weight of the bucket from the relevant figure shown. Remember, when loads are to be lifted by the backhoe unit, a bucket must be fitted. For further information regarding lifting regulations and inspection procedures consult your nearest JCB Distributor.

	Safe Working Load
Standard Dipper with Quickhitch	1000kg (2205lb)

BACKHOE BUCKET WEIGHTS AND DIMENSIONS

General Purpose Buckets (Standard Profile)

Width		Rated Capacity		Struck Capacity		Weight	
mm	in	m^3	ft^3	m^3	ft^3	kg	lbs
305	12	0.06	2 1/8	0.05	1 3/4	95	210
400	16	0.09	3	0.07	2 1/2	108	238
455	18	0.12	4 1/4	0.09	3	112	247
610	24	0.17	6	0.13	4 1/2	138	304
800	32	0.24	8 1/2	0.17	6	160	353
950	37	0.29	10 1/2	0.21	7 1/4	178	393

General Purpose Buckets (Deep Profile)

Width		Rated Capacity		Struck Capacity		Weight	
mm	in	m^3	ft^3	m^3	ft^3	kg	lbs
305	12	0.09	3	0.07	2 1/2	117	258
400	16	0.13	4 1/2	0.11	3 3/4	124	274
455	18	0.15	5 1/2	0.13	4 1/2	133	294
610	24	0.23	8	0.18	6 1/4	156	344
800	32	0.32	11 1/4	0.24	8 1/2	186	410
950	37	0.39	13 3/4	0.30	10 1/2	207	457
1100	43	0.47	16 1/2	0.34	12	229	505

Grading Buckets

Width		Rated Capacity		Struck Capacity		Weight	
mm	in	m^3	ft^3	m^3	ft^3	kg	lbs
1525	60	0.18	6 1/2	-	-	148	327
1830	72	0.30	10 1/2	-	-	168	371

Jaw Bucket

Width		Rated Capacity		Struck Capacity		Weight	
mm	in	m^3	ft^3	m^3	ft^3	kg	lbs
305	12	0.07	2 1/2	0.06	2	230	507
460	18	0.14	5	0.12	4	260	574
600	24	0.20	7	0.17	6	288	635

Tapered Ditching Buckets

Width		Rated Capacity		Struck Capacity		Weight	
mm	in	m^3	ft^3	m^3	ft^3	kg	lbs
1067	42	0.12	4	-	-	109	241
1676	66	0.07	2 1/4	-	-	192	424

STATIC DIMENSIONS

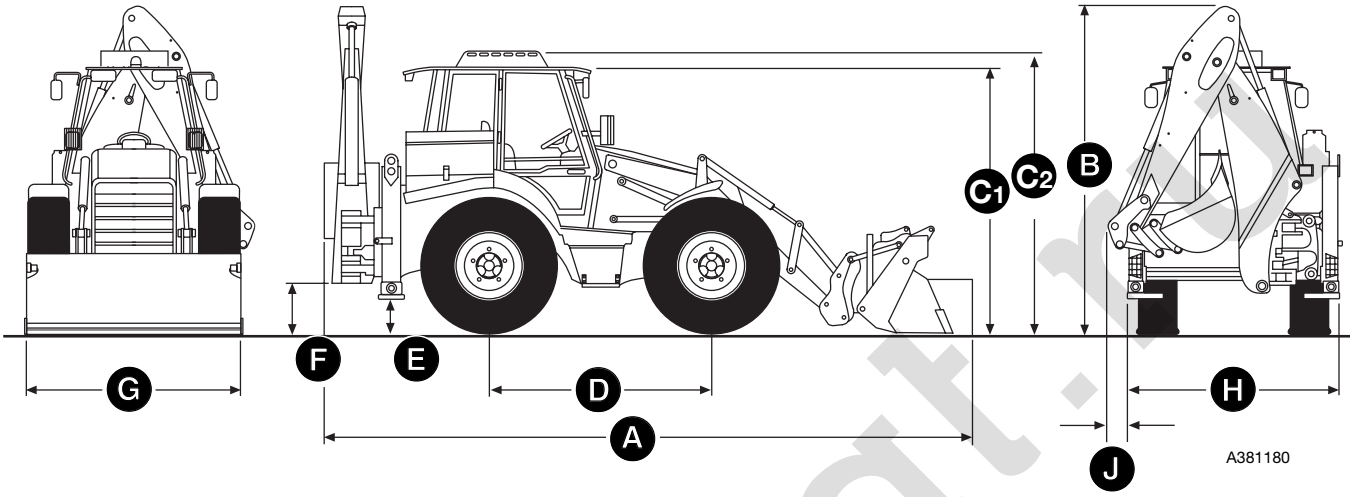

A	Overall length (ancillary) Overall length (bucket, carry) Overall length (bucket, ground) Overall length (forks, carry)) Overall length (forks, ground)	7.13m 6.30m 6.425m 6.51m 7.13m
B	Overall height	3.52m
C1	Height to top of cab for C130 (Detachable roof section removed)	2.7m 2.67m
C2	Height to top of cab (Detachable roof section in place)	2.83m
D	Wheelbase	2.218m
E	Ground clearance - stabiliser	0.37m
F	Ground clearance - kingpost	0.52m
G	Width - bucket	2450mm
H	Width - frame	2350mm
J	Width - travel	80mm

Dimensions are based on standard tyres fitted.

BACKHOE/LOADER DIMENSIONS

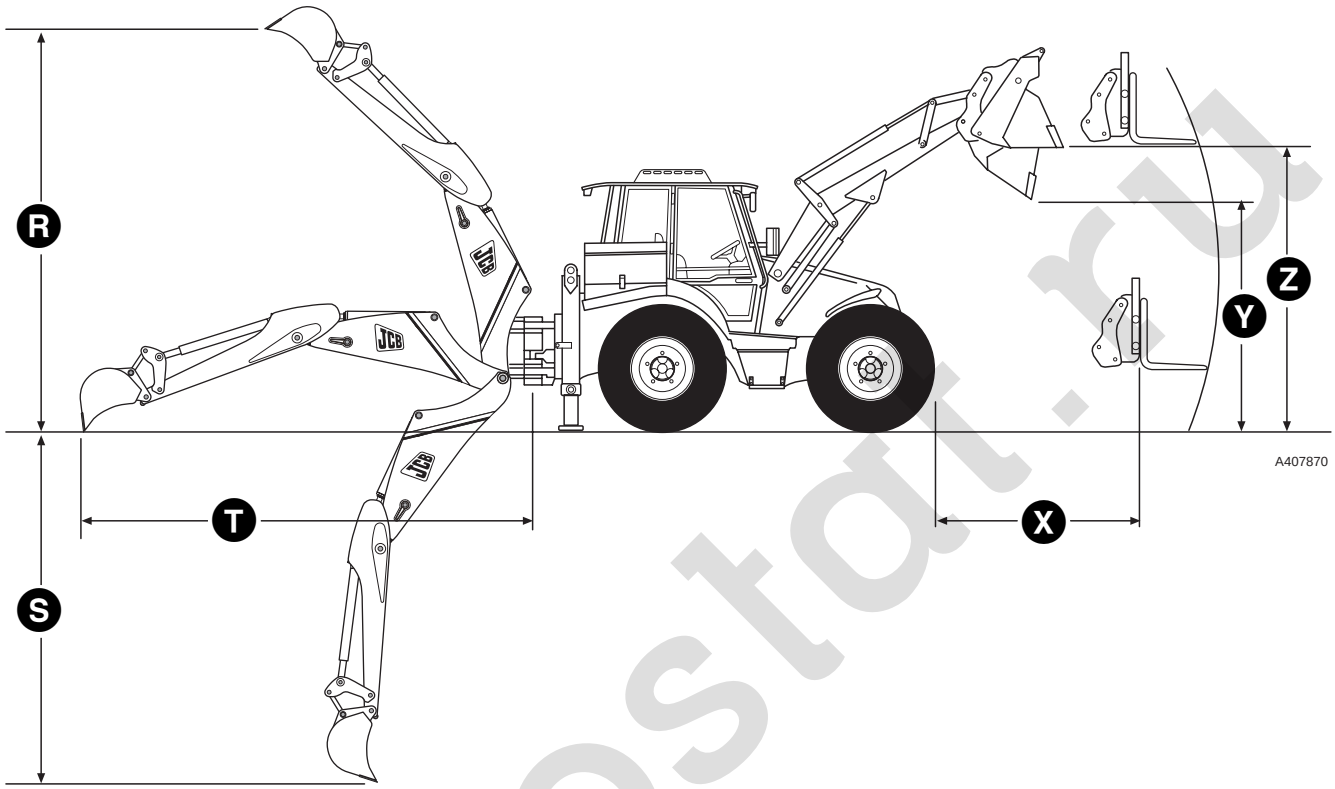

R	Maximum operating height with Quickhitch without Quickhitch	 3.46 m 4.08 m
S	Maximum dig depth	4 49 m
T	Maximum reach (Ground level to slew centre)	5.55 m
X	Maximum reach	1.50 m
Y	Dump height	2.43 m
Z	Load over height	3.40 m

Dimensions are based on standard tyres fitted.

FORDING DEPTHS

Normal/Fresh water	750 mm
Short Durations (Up to 10 minutes/Slow speed)	1000 mm

WEIGHTS

Machine configuration

	Front	Rear	Total
Fork lift & 750mm bucket	2720kg (5997 lb)	6020kg (13272 lb)	8740kg (19268 lb)
Shovel & 750mm bucket	3510kg (7738 lb)	5680kg (12522 lb)	9190kg (20260 lb)
Shovel & 750mm bucket	3790kg (8355 lb)	5580kg (12301 lb)	9370kg (20657 lb)
Ancillary & 750mm bucket	5030kg (11089 lb)	4950kg (10912 lb)	9980kg (22002 lb)

Attachments

Fork lift attachment	469kg (1034 lb)	Ripper	84kg (185 lb)
Multi-purpose shovel with teeth	926kg (2041 lb)	Ancillary stowage frame	113 kg(249 lb)
Loader quickhitch	179kg (394 lb)	1500mm ditch bucket with pins	158 kg (348 lb)
Spare wheel & tyre	171kg (377 lb)	Sweeper collector	763kg (1682 lb)
Stowage box	40kg (88 lb)	Laser leveller	1160kg (2557 lb)
Excavtor quickhitch		Detachable roof section	48.5kg (107 lb)
with pins & shackle	91kg (200 lb)	Tool kit with 1 rachet strap	18kg (40 lb)
300mm bucket with pins & hitch	105kg (231 lb)		
750mm bucket with pins & hitch	170kg (374 lb)		
Hammermaster with pins	473kg (1043 lb)		
Earthdrill with auger	150kg (330 lb)		

TYRE SIZES AND PRESSURES

Front Wheels

Size x Ply	Type	Make	Remarks	Pressure bar	Pressure lbf/in^2
440/80-R28	IT530L	Goodyear	Non directional	2.4	35

Rear Wheels

Size x Ply	Type	Make	Remarks	Pressure bar	Pressure lbf/in^2
440/80-R28	IT530L	Goodyear	Non directional	2.4	35

Note: When air freighting a machine the tyre pressure must be reduced to 1.6 bar (23lbf/in^2) and a maximun speed of 10kph (6mph). Inflate the tyres to the correct pressure after unloading.

HYDRAULIC HOSE BURST PRESSURES

A table (see below) is included to advise the machine operator of the hydraulic hose burst pressures for all hoses used on this machine.

The heading at the top of the left-hand column is 'JCB Prefix Number', this number can be found stamped on the swaged end of a hose immediately behind the hose nut. The number is the prefix of the part number,e.g., **612**/21100.

JCB PREFIX	BORE SIZE	RANGE	MAXIMUM WORKING PRESSURE	MINIMUM BURST PRESSURE
607/	19.05 mm	Medium Pressure	235 bar	950 bar
611/	6.35 mm	High Pressure	400 bar	1600 bar
612/	9.525 mm	High Pressure	330 bar	1320 bar
613/	12.7 mm	High Pressure	275 bar	1100 bar
614/	15.875 mm	High Pressure	250 bar	1000 bar
615/	19.05 mm	High Pressure	275 bar	1100 bar
629/	5 mm	SAE 100 R7 (or 3/16 in)	207 bar	827 bar
631/	6.35 mm	Low Pressure	190 bar	760 bar
632/	9.525 mm	Low Pressure	155 bar	620 bar
633/	12.7 mm	Low Pressure	140 bar	550 bar
634/	15.875 mm	Low Pressure	100 bar	415 bar
635/	19.05 mm	Low Pressure	85 bar	345 bar
637/	25.4 mm	Low Pressure	70 bar	275 bar

NOISE AND VIBRATION DATA

	Engine Rating (Nett Power) † -	**69.2 kW**
	Fan Ratio -	**1.16:1**
NOISE		
1	In-Cab Noise (Noise Level at Operators Ear)	77 LpA (tested to ISO 6396 : 1992)
2	By-stander / External Noise Level (Noise Guarantee)	104 LwA (tested to 2000/14/EC)
VIBRATION		
3	Weighted rms acceleration : Whole Body (m/s^2)	1.5
4	Weighted rms acceleration : Hand/Arm (m/s^2)	< 2.5

Item 3 above is an "Average Equivalent Value" determined from measurement on machines performing typical duties detailed below, with values weighted in accordance with ISO 2631.

Item 4 above measured at the steering control device when machine is travelling over an irregular "Quarry floor" surface, with values weighted in accordance with ISO 2631.

The Vibration values are determined from measurements in three perpendicular planes.

Values determined with standard shovel and excavator bucket fitted.

For information relating to this machine when used with other JCB approved attachments, please refer to the literature accompanying the attachments.

†Note: Refer to machine data plate for nett power rating.

Typical Duties for the 4CX machine:

Roading (Tarmac)
Roading (Rough Terrain)
Excavating
Loading cycles

WINTERISATION

Introduction

The section details the use of Winterised and Waterproofed machines which is only applicable to the machines listed below.

Serial numbers
927519
927526
927529
927532
927535

The machines listed above have been prepared in line with guidance from DefStan 23-8/2 Winterisation-Military Logistic Vehicles, Towed Equipment and Mechanical Handling Equipment.

The fuel fired heater must be used as described in this section and the snow blinds fitted as detailed.

IMPORTANT - The machine must be prepared with the correct grade of fluids, fuels and oils for conditions that the machine will be operated or stored in, see pages 105, 106.

The machines have been equipped with a fuel fired heating system as protection from damage that can be caused to components from storage at cold temperatures, for personnel comfort and protection from the cold and as a starting aid if the machine has been stored at cold temperatures down to -46ºC (-50.7ºF).

The fuel burning heater, pumps hot coolant, via its own internal pump, around the engine, battery heater, standard cab heater and the auxiliary cab heaters. It raises the engine and battery temperatures sufficiently to allow the machine to start at -40ºC (-40ºF) after storage and also raises the cab temperature to livable conditions. The radiators work on transferral of heat via convection or, in the case of batteries, by direct contact. An element is placed in the battery box because vehicle lead acid batteries are very susceptible to the cold and if allowed to drop much below -20ºC, -4ºF, the cold crank performance and ability to accept a charge are greatly reduced.

The unit is fully waterproof and is also EMC compliant.

Operation

The dash mounted switch **A** operates the heater and is in the ON position **B** when turned one notch clockwise from the normally OFF position **C**.

The heater will then begin the ‘initial start up’ which initialises the fuel, air and water pumps. When the ‘initial start up’ is complete (approx 2 minutes) the burner will ignite, a faint smell of fuel and some smoke is common at this stage. As the heater motor speeds up and full ignition temperatures are reached no smoke should be present.

The burner will run at full power until the coolant reaches normal operating temperature (approx 80ºC, 176ºF) which it senses internally, it will continue to pump water but shut down the burner, until the water temperature drops below the trigger temperature (approx 75ºC, 167ºF) when the burner will again ignite automatically on thermostatic control.

If the machine fans are left in the ON position (any speed) the heater will automatically turn them ON when its internal temperature reaches 30ºC, 86ºF, this facility can be used to help demist the windows and heat the cab prior to entering the cab. To ensure the best performance, the positioning of the air distribution vents and vent controls must be adjusted correctly. The cab heater performance can be improved in the cold by switching the heater control to re-circulate, see page 25.

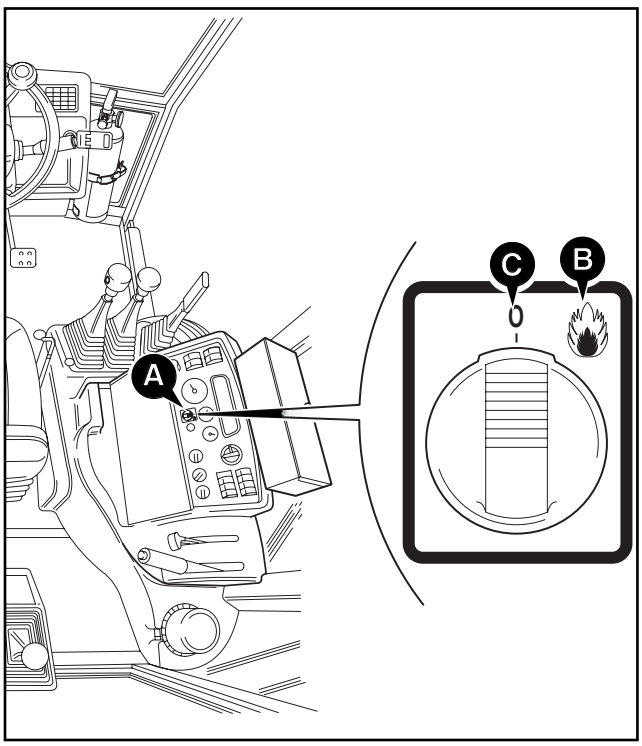

WINTERISATION

The auxiliary heater elements are controlled by taps. The heater taps are located at the radiator grille **D** and behind the battery box **E**. The taps are ON **F when** the handles are in line with the body of the tap and OFF **G** when the handle is 90° to the body of the tap.

Note: In normal ambient temperatures both auxiliary heater taps **D** and **E** should be turned to the OFF position **G** to isolate the additional heater elements.

The battery heater **E** should only be used in cold conditions, when the machine is left standing in cold conditions or when starting from cold storage. Under normal or mild cold conditions (-21°C, -5.7°F) the batteries generate enough internal heat to maintain operational conditions.

Note: If the internal battery temperatures go above 50°C, 122°F the battery function is adversely affected.

WINTERISATION

Snow Blind Deployment and Stowage

The snow blinds are supplied as a kit and are intended to give protection to the cab windows and the machine radiator from the effects of chill, frost and snow. The blinds have been designed to be fitted by one operator with some additional assistance as required.

Note: The blinds must not be stowed or stored in a wet condition. Although the materials used in the manufacturing process are waterproof, mildew and mould may cause the blinds to become defective.

Radiator Blind

The radiator blind is fitted by means of leather straps and staples fitted to the body. It is designed to protect the radiator from becoming blocked by driving snow when parked and to reduce the cooling effect of the wind, by reducing the exposed radiator area, when being operated in cold conditions.

The radiator blind should always be fitted and the centre section fixed closed **A** when parked in cold conditions and rolled and locked in the open position **B** when the engine is running.

Note: The radiator blind should always be totally removed from the machine when operating in normal ambient temperatures.

When the blind is removed from the machine it should be carefully stowed in the bag provided and see **Note** about wet blinds.

Cab Window Blinds

The cab window blinds are fitted to the roof of the machine by means of webbing straps and are held in the closed position by leather straps through staples attached to the body and by Velcro strips on the inside of the cab. They are designed to protect the windows from wind chill, frost and freezing snow.

The blinds can be left fitted to the machine at all times and stowed in the open position **C** by means of the webbing straps. In cold conditions the blinds should be left in the closed position **D** until the machine is to be driven.

⚠ DANGER

The machine must NEVER be moved with any of the window or door blinds in place as they severely impair vision, serious injury or death could result.

The blinds should be carefully stowed up to the roof so as to form a tight roll that does not overhang the edge of the machine roof or windscreen. This is best done by two operators, one either side of the machine.

When the blinds are removed from the machine they should be carefully stowed in the bag provided and see **Note** about wet blinds.

WINTERISATION

Door Blinds

The door blinds are retained to the machine by wrapping the edges around the door and fastening by Velcro strips to the interior of the door as shown at **E**.

⚠ DANGER

The machine must NEVER be moved with any of the window or door blinds in place as they severely impair vision, serious injury or death could result.

When the blinds are removed from the machine they should be carefully stowed in the bag provided and see **Note** about wet blinds on previous page.

WINTERISATION

Fuse Identification

		Fuse Rating
COLUMN 'A'		
1	Hydraulic auxiliary	10 Amp
2	Fuel pump solenoid (engine stop)	5 amp
3	Direction indicators	7.5 amp
4	Steer mode proximity switch	7.5 Amp
5	Gearbox control, Transmission	10 Amp
6	Fuel & Air pumps	30 Amp
7	Brake lights	7.5 Amp
8	Headlight Flash	10 Amp
9	Left hand side lights	5 Amp
10	Right hand side lights	5 Amp
COLUMN 'B'		
1	Instruments, Buzzer	5 Amp
2	Front horn, Front washer/wiper	15 Amp
3	Rear horn	7.5 Amp
4	In-cab Power Outlet	15 Amp
5	Rear wiper/wash	10 Amp
6	Brake switch	10 Amp
7	Return to dig enable	5 Amp
8	Rear working lights	25 Amp
9		
10	Front working lights	25 Amp
COLUMN 'C'		
1	Lights	15 Amp
2	Hazard light	15 Amp
3	Convoy lights/sidelights	5 Amp
4	Beacon	5 Amp
5	Thermostart	20 Amp
6	Heater	30 Amp
7	Ignition relay coils	3 Amp
8	Main beam	15 Amp
9	Fog light	3 Amp
10	Dip beam	15 Amp

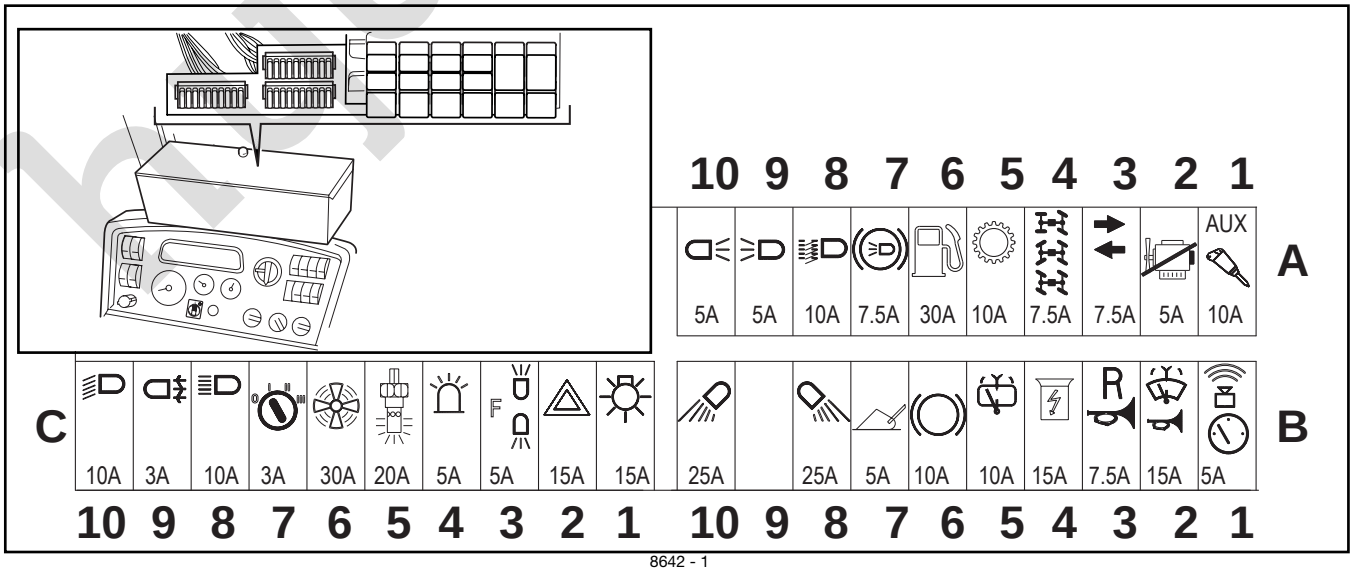

8642 - 1

WINTERISATION

Relay Identification

A Heater
B Direction indicator
C Ignition
D Ignition
E Neutral start
F Buzzer
G Combat ignition
H Rear working lights
J Front working lights
K Rear horn
L 2/4 wheel braking
M Engine run
N Combat lockout- brake lights
P Combat lockout- work lights
Q Hydraulic speed control
R Hammer
S Main lights
T 2 wheel drive
U Parking brake
V Combat lockout- reverse alarm

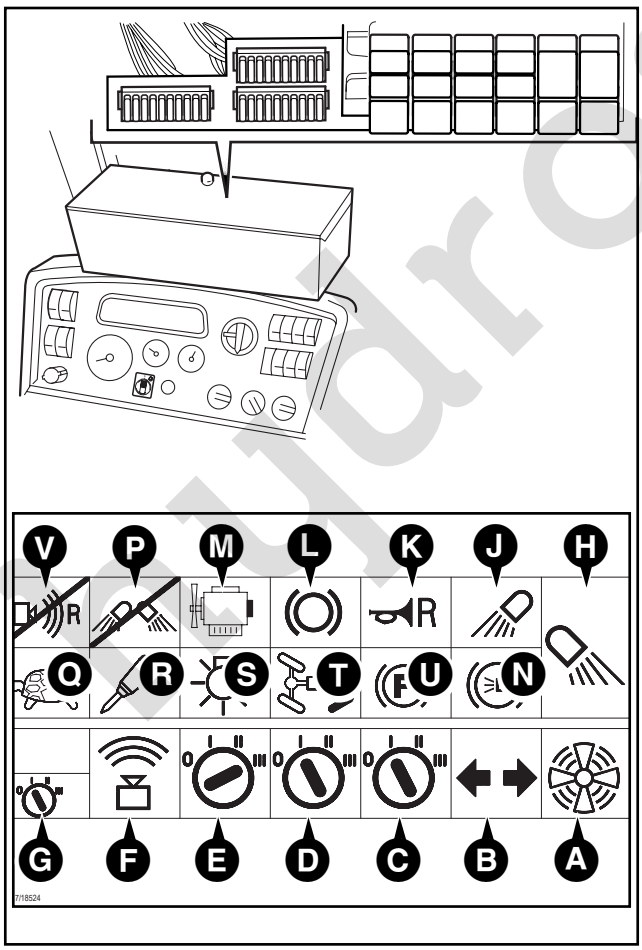

Relay Identification-Powershift Transmission

Remove cover **X** for access to the relays. When fitting cover **X** make sure the seal is not damaged and is fitted in the cover correctly to ensure the waterproofing capabilities.

1 Spare
2 Reverse drive
3 Reverse (High/Low ratio)
4 Forward (High/Low ratio)
5 Transmission dump
6 Forward drive
7 Driveshaft interlock
8 Drive (Layshaft/Mainshaft)

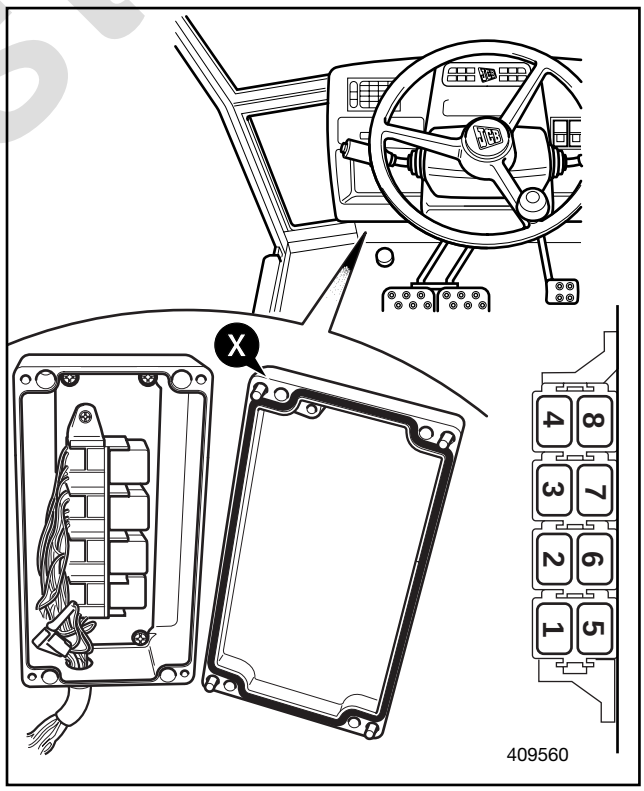

WATERPROOFING

SERVICE RECORD SHEET

Distributor Preparation Despatch Sheet

Date .....

1st 100 Hrs./1 Months

Date .....

Hour reading .....

500 Hrs./6 Months

Date .....

Hour reading .....

6 Month

Shackle Inspection F2531 (F97) (UK only)

Date .....

Hour reading .....

1000 Hrs./12 Months

Annual Insurance & Shackle Inspection

Date .....

Hour reading .....

14 Months

F2530 (F91) Inspection (UK only)

Date .....

Hour reading .....

1500 Hrs./18 Months

Date .....

Hour reading .....

18 Month

Shackle Inspection F2531 (F97) (UK only)

Date .....

Hour reading .....

2000 Hrs./24 Months

Annual Insurance & Shackle Inspection

Date .....

Hour reading .....

28 Months

F2530 (F91) Inspection (UK only)

Date .....

Hour reading .....

2500 Hrs./30 Months

Date .....

Hour reading .....

30 Month

Shackle Inspection F2531 (F97) (UK only)

Date .....

Hour reading .....

3000 Hrs./36 Months

Annual Insurance & Shackle Inspection

Date .....

Hour reading .....

3500 Hrs./42 Months

Date .....

Hour reading .....

42 Month

Shackle Inspection F2531 (F97) (UK only)

Date .....

Hour reading .....

4000 Hrs./48 Months

Date .....

Hour reading .....

4 Years

Test & Eamination F2531 (F96) (UK only)

Date .....

Hour reading .....

4500 Hrs./54 Months

Date .....

Hour reading .....

54 Month

Shackle Inspection F2531 (F97) (UK only)

Date .....

Hour reading .....

56 Months

F2530 (F91) Inspection (UK only)

Date .....

Hour reading .....

Note: It may be essential to change the Engine Oil and Filter every 250 Hours. Check machine service schedule and application requirements.

SERVICE RECORD SHEET

5000 Hrs./60 Months
Annual Insurance & Shackle Inspection
Date .....
Hour reading .....

5500 Hrs./66 Months
Date .....
Hour reading .....

66 Month
Shackle Inspection F2531 (F97) (UK only)
Date .....
Hour reading .....

70 Months
F2530 (F91) Inspection (UK only)
Date .....
Hour reading .....

6000 Hrs./72 Months
Annual Insurance & Shackle Inspection
Date .....
Hour reading .....

6500 Hrs./78 Months
Date .....
Hour reading .....

78 Month
Shackle Inspection F2531 (F97) (UK only)
Date .....
Hour reading .....

7000 Hrs./84 Months
Annual Insurance & Shackle Inspection
Date .....
Hour reading .....

84 Months
F2530 (F91) Inspection (UK only)
Date .....
Hour reading .....

7500 Hrs./90 Months
Date .....
Hour reading .....

90 Month
Shackle Inspection F2531 (F97) (UK only)
Date .....
Hour reading .....

8000 Hrs./96 Months
Annual Insurance & Shackle Inspection
Date .....
Hour reading .....

98 Months
F2530 (F91) Inspection (UK only)
Date .....
Hour reading .....

8500 Hrs./102 Months
Date .....
Hour reading .....

102 Month
Shackle Inspection F2531 (F97) (UK only)
Date .....
Hour reading .....

9000 Hrs./108 Months
Annual Insurance & Shackle Inspection
Date .....
Hour reading .....

112 Months
F2530 (F91) Inspection (UK only)
Date .....
Hour reading .....

9500 Hrs./114 Months
Date .....
Hour reading .....

10,000 Hrs./120 Months
Annual Insurance & Shackle Inspection (UK only)
Date .....
Hour reading .....

10,500 Hrs./126 Months
Date .....
Hour reading .....

Note: It may be essential to change the Engine Oil and Filter every 250 Hours. Check machine service schedule and application requirements.